# CALGARY

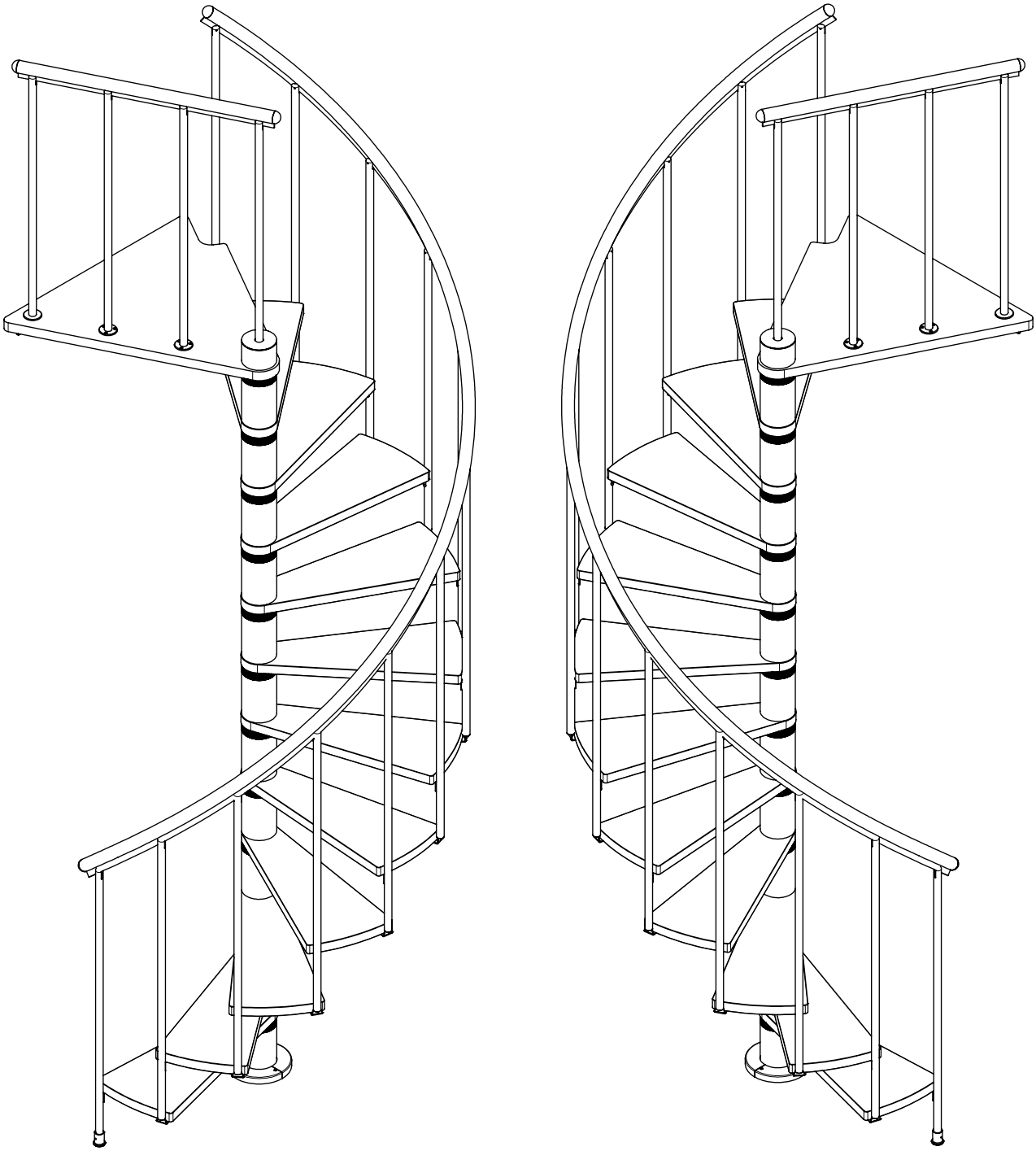

YouTube
Dolle Group

R1-96700 / 02-03-2016 / Rev. 13-03-2018

1

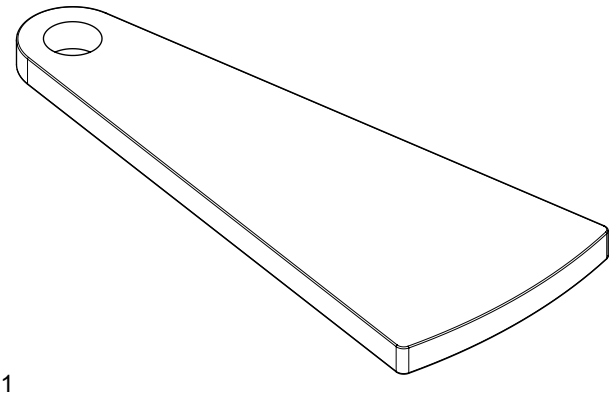

× 11

3

× 12
K1-71231 *RAL 9006*
K1-71431 *RAL 7016*
K1-71631 *RAL 9016*

4

× 1
K1-71020

5

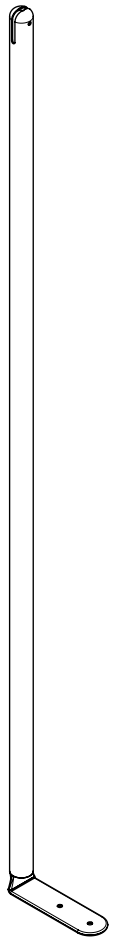

× 11
K1-71230 *RAL 9006*
K1-71430 *RAL 7016*
K1-71630 *RAL 9016*

6

× 1
K1-71220
*RAL 9006*
K1-71420
*RAL 7016*
K1-71620
*RAL 9016*

2

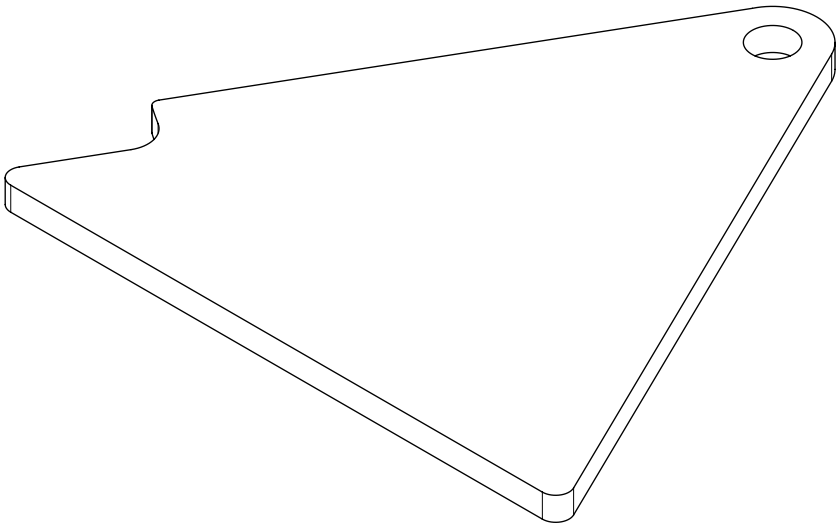

× 1

7

× 1
K1-32224 *RAL 9006*
K1-71421 *RAL 7016*
K1-32424 *RAL 9016*

8

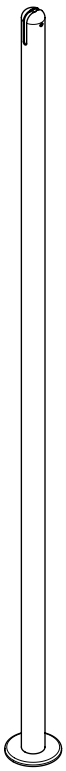

× 1
K2-71260 *RAL 9006*
K2-71460 *RAL 7016*
K2-71660 *RAL 9016*

9

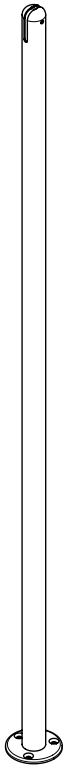

× 2
K2-71250 *RAL 9006*
K2-71450 *RAL 7016*
K2-71650 *RAL 9016*

10

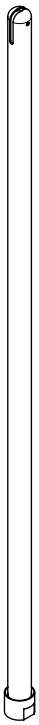

× 1
K2-71240 *RAL 9006*
K2-71440 *RAL 7016*
K2-71640 *RAL 9016*

11

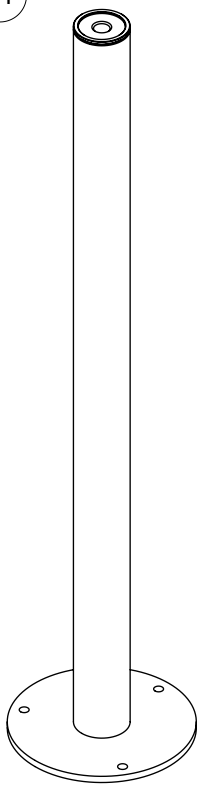

× 1
K2-71010

12

× 1
K2-71012

13

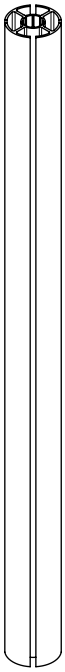

× 1
K1-71000

14

× 1
K3-07023

15

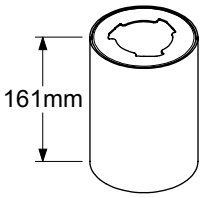


× 1
K2-71210 *RAL 9006*
K2-71410 *RAL 7016*
K2-71610 *RAL 9016*

16

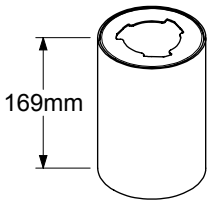


× 11
K2-71211 *RAL 9006*
K2-71411 *RAL 7016*
K2-71611 *RAL 9016*

17

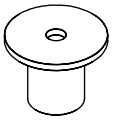

× 1
K2-71005

18

× 3
K1-71201 *RAL 9006*
K1-71401 *RAL 7016*
K1-71601 *RAL 9016*

19

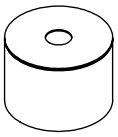

× 1
K2-71215 *RAL 9006*
K2-71415 *RAL 7016*
K2-71615 *RAL 9016*

20

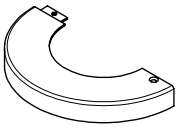

× 2
K2-71200 *RAL 9006*
K2-71400 *RAL 7016*
K2-71600 *RAL 9016*

21

× 4
K1-71290 *RAL 9006*
K1-39010 *RAL 7016*
K1-29486 *RAL 9016*

22

× 2
K1-39000

23

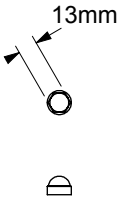


× 6
K1-01013 *RAL 9006*
K1-01023 *RAL 7016*
K1-01003 *RAL 9016*

24

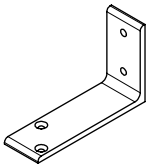

× 1
K1-19310 *RAL 9006*
K1-71402 *RAL 7016*
K1-71602 *RAL 9016*

25

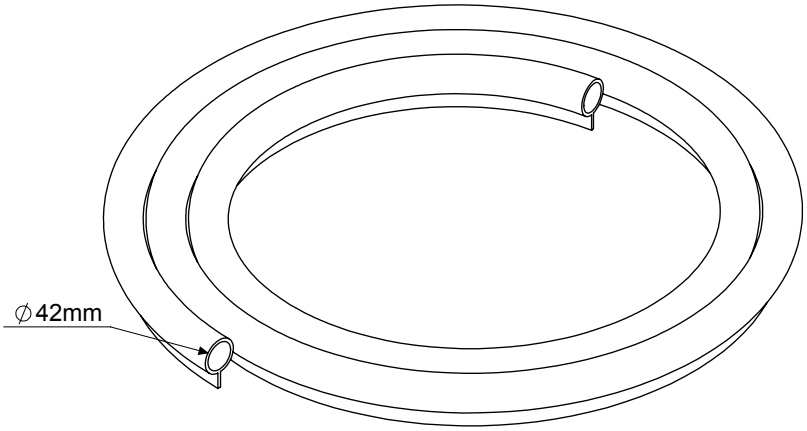


× 1
K1-71292 *4,2 m - RAL 9006*
K1-39117 *4,2 m - RAL 7016*
K1-71692 *4,2 m - RAL 9016*

26

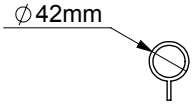


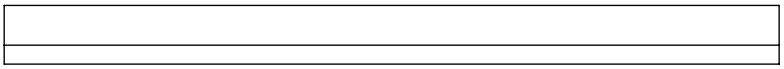

× 1
K1-71291 *1,0 m - RAL 9006*
K1-39110 *1,0 m - RAL 7016*
K1-29410 *1,0 m - RAL 9016*

27

× 72
K1-71205 *RAL 9006*
K1-71405 *RAL 7016*
K1-71605 *RAL 9016*

| | | | | | |
|---|---|---|---|---|---|
| 50<br>× 63<br>K3-06022 *RAL 9006*<br>K3-10226 *RAL 7016*<br>K3-10126 *RAL 9016*<br>*Ø5 x 35* | 51<br>× 24<br>K3-06199 *RAL 9006*<br>K3-10239 *RAL 7016*<br>K3-10139 *RAL 9016*<br>*M5 x 20* | 52<br>× 1<br>K3-90001 | 53<br>× 9<br>K3-04028<br>*Ø8,4* | 54<br>× 8<br>K3-08004<br>*Ø10 x 60* | 55<br>× 8<br>K3-06015<br>*M8 x 70* |
| 56<br>× 1<br>K3-03024<br>*M20 x 18* | 57<br>× 1<br>K3-04020<br>*Ø20* | 58<br>× 1<br>K3-08002<br>*Ø8 x 40* | 59<br>× 2<br>K3-02131 *RAL 9006*<br>K3-10231 *RAL 7016*<br>K3-10131 *RAL 9016*<br>*M4 x 10* | 60<br>× 1<br>K3-05013 *RAL 9006*<br>K3-10233 *RAL 7016*<br>K3-10133 *RAL 9016*<br>*M6 x 6* | 61<br>× 16<br>K3-05011 *RAL 9006*<br>K3-10230 *RAL 7016*<br>K3-10130 *RAL 9016*<br>*M5 x 20* |
| 62<br>× 1<br>K3-02081<br>*M8 x 70* | 63<br>× 1<br>K3-03014<br>*M20 x 10* | 69<br>× 1<br>R1-63272<br>*Ø6 x 25* | 71<br>× 1<br>K3-06016<br>*Ø6 x 40* | | |

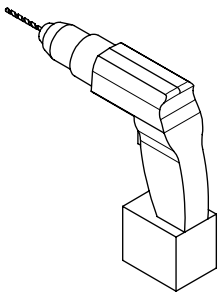

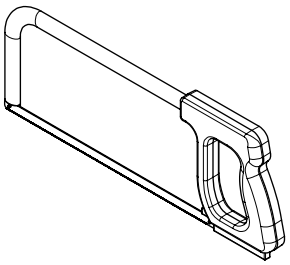

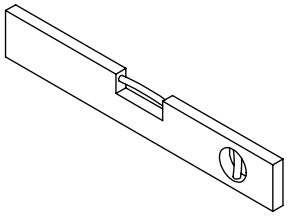

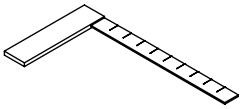

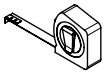

Torx 25

2,5mm

3mm

4mm

× 2

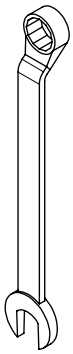

30mm

13mm



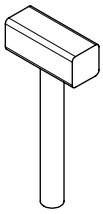

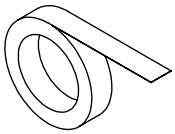

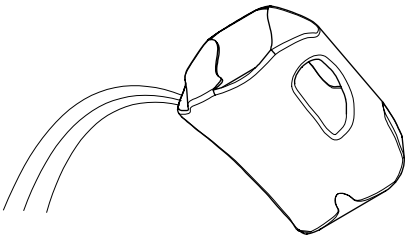

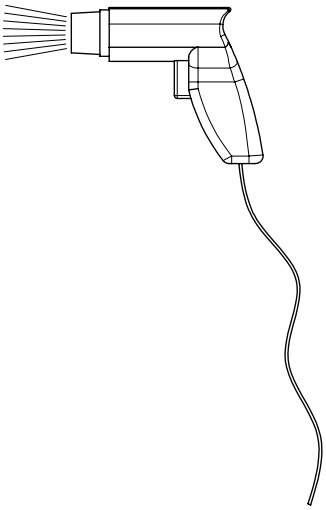

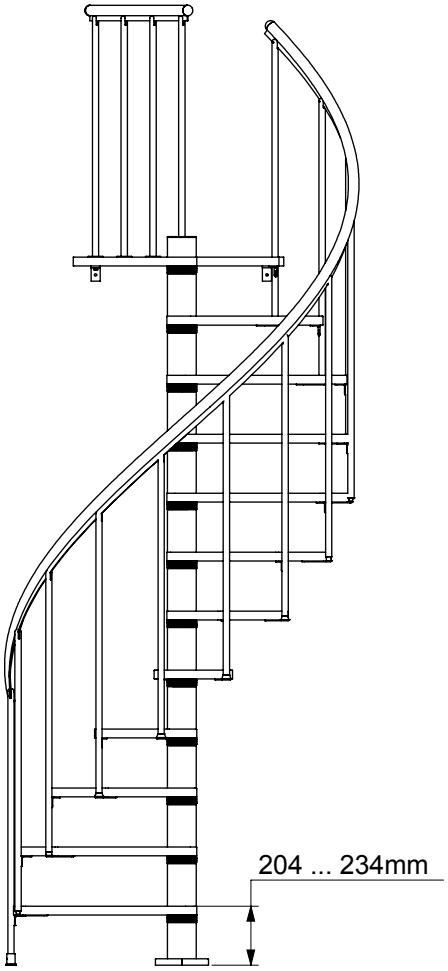


204 mm

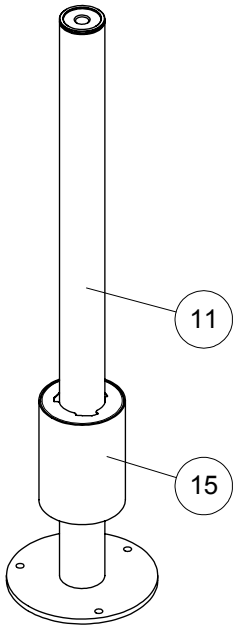


209 mm

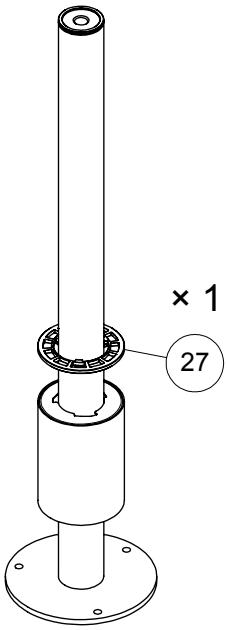


214 mm

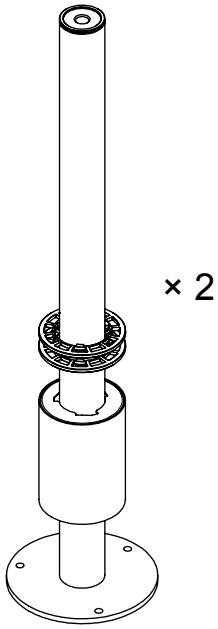


219 mm

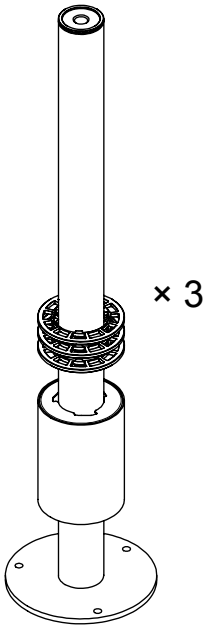


224 mm

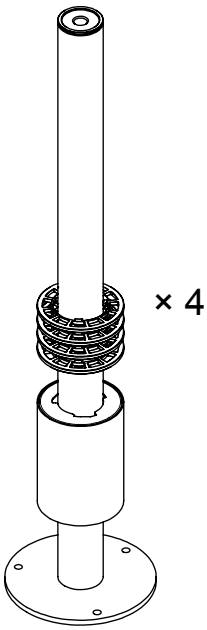


229 mm

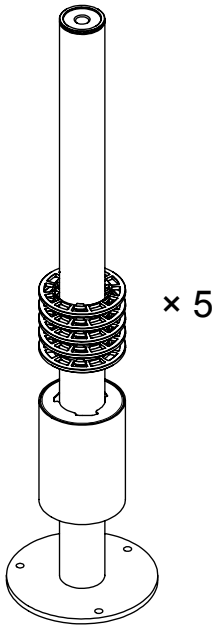


234 mm

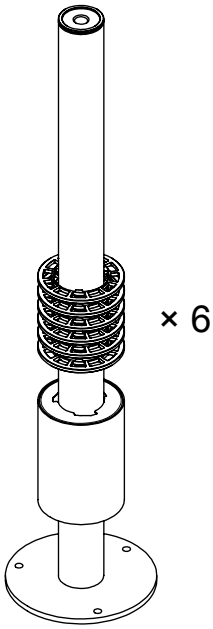

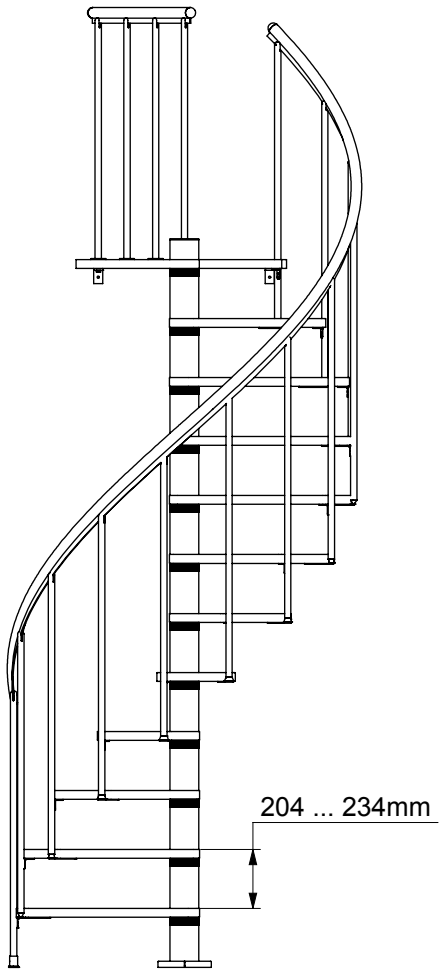


204 mm

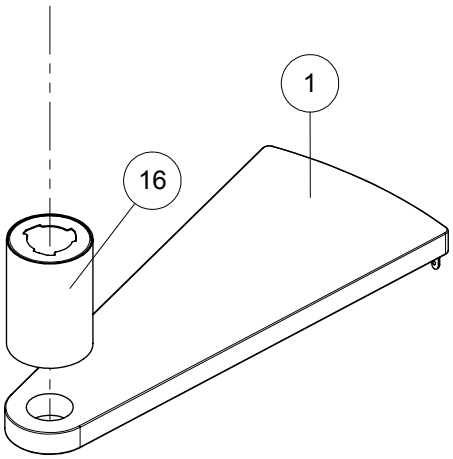


209 mm

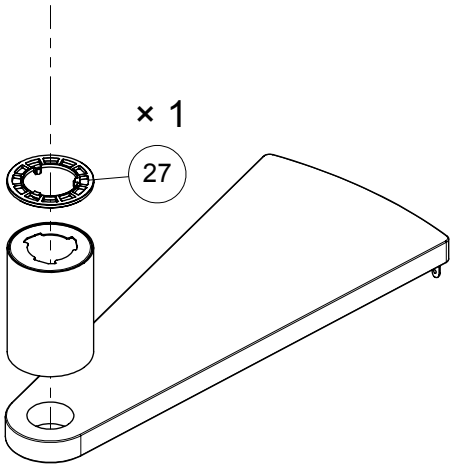


214 mm

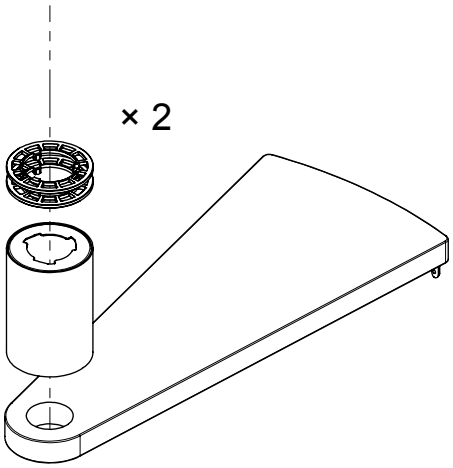


219 mm

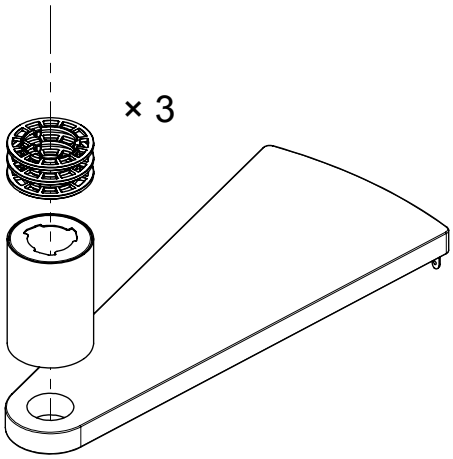


224 mm

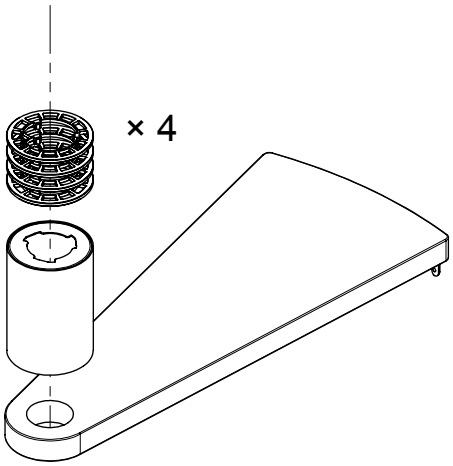


229 mm

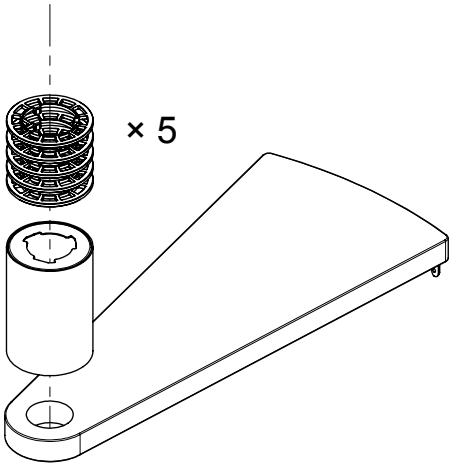


234 mm

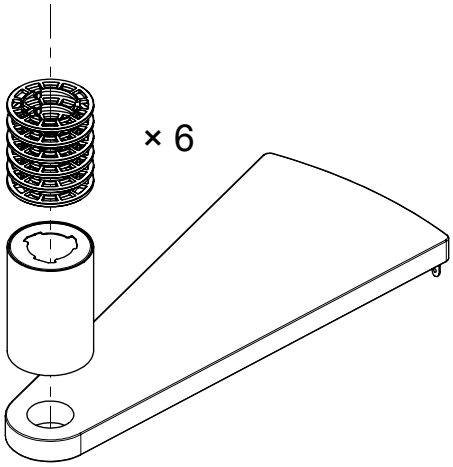

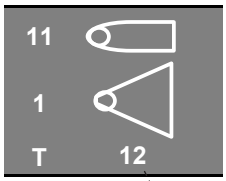


**N**
0 ... 6 st (pcs)

12 **T**

**N**
0 ... 6 st (pcs)

**P**
+1
st (pcs)

**N × T**

5 st (pcs) × 12
= 60 st (pcs)

**P**

+6 st (pcs)

| | | |
|---|---|---|
| 2773 | 5 | 5 |
| 2778 | 5 | 6 |
| 2783 | 5 | 7 |
| 2788 | 5 | 8 |
| 2793 | 5 | 9 |
| 2798 | 5 | 10 |

| | | |
|---|---|---|
| 2773 | 5 | 5 |
| 2778 | 5 | 6 |
| 2783 | 5 | 7 |
| 2788 | 5 | 8 |
| 2793 | 5 | 9 |
| 2798 | 5 | 10 |

T

H 2778 mm

| 9 | | | | | | 10 | | | | | | 11 | | | | | |
|---|---|---|---|---|---|---|---|---|---|---|---|---|---|---|---|---|---|
| 1 | | | | | | 1 | | | | | | 1 | | | | | |
| T | 10 | | | | | T | 11 | | | | | T | 12 | | | | |
| H | N | P | H | N | P | H | N | P | H | N | P | H | N | P | H | N | P |
| | st | st | | st | st | | st | st | | st | st | | st | st | | st | st |
| mm | pcs | pcs | mm | pcs | pcs | mm | pcs | pcs | mm | pcs | pcs | mm | pcs | pcs | mm | pcs | pcs |
| 2040 | 0 | 0 | 2195 | 3 | 1 | 2244 | 0 | 0 | 2414 | 3 | 1 | 2448 | 0 | 0 | 2633 | 3 | 1 |
| 2045 | 0 | 1 | 2200 | 3 | 2 | 2249 | 0 | 1 | 2419 | 3 | 2 | 2453 | 0 | 1 | 2638 | 3 | 2 |
| 2050 | 0 | 2 | 2205 | 3 | 3 | 2254 | 0 | 2 | 2424 | 3 | 3 | 2458 | 0 | 2 | 2643 | 3 | 3 |
| 2055 | 0 | 3 | 2210 | 3 | 4 | 2259 | 0 | 3 | 2429 | 3 | 4 | 2463 | 0 | 3 | 2648 | 3 | 4 |
| 2060 | 0 | 4 | 2215 | 3 | 5 | 2264 | 0 | 4 | 2434 | 3 | 5 | 2468 | 0 | 4 | 2653 | 3 | 5 |
| 2065 | 0 | 5 | 2220 | 3 | 6 | 2269 | 0 | 5 | 2439 | 3 | 6 | 2473 | 0 | 5 | 2658 | 3 | 6 |
| 2070 | 0 | 6 | 2225 | 3 | 7 | 2274 | 0 | 6 | 2444 | 3 | 7 | 2478 | 0 | 6 | 2663 | 3 | 7 |
| 2075 | 0 | 7 | 2230 | 3 | 8 | 2279 | 0 | 7 | 2449 | 3 | 8 | 2483 | 0 | 7 | 2668 | 3 | 8 |
| 2080 | 0 | 8 | 2235 | 3 | 9 | 2284 | 0 | 8 | 2454 | 3 | 9 | 2488 | 0 | 8 | 2673 | 3 | 9 |
| 2085 | 0 | 9 | 2240 | 4 | 0 | 2289 | 0 | 9 | 2459 | 3 | 10 | 2493 | 0 | 9 | 2678 | 3 | 10 |
| 2090 | 1 | 0 | 2245 | 4 | 1 | 2294 | 0 | 10 | 2464 | 4 | 0 | 2498 | 0 | 10 | 2683 | 3 | 11 |
| 2095 | 1 | 1 | 2250 | 4 | 2 | 2299 | 1 | 0 | 2469 | 4 | 1 | 2503 | 0 | 11 | 2688 | 4 | 0 |
| 2100 | 1 | 2 | 2255 | 4 | 3 | 2304 | 1 | 1 | 2474 | 4 | 2 | 2508 | 1 | 0 | 2693 | 4 | 1 |
| 2105 | 1 | 3 | 2260 | 4 | 4 | 2309 | 1 | 2 | 2479 | 4 | 3 | 2513 | 1 | 1 | 2698 | 4 | 2 |
| 2110 | 1 | 4 | 2265 | 4 | 5 | 2314 | 1 | 3 | 2484 | 4 | 4 | 2518 | 1 | 2 | 2703 | 4 | 3 |
| 2115 | 1 | 5 | 2270 | 4 | 6 | 2319 | 1 | 4 | 2489 | 4 | 5 | 2523 | 1 | 3 | 2708 | 4 | 4 |
| 2120 | 1 | 6 | 2275 | 4 | 7 | 2324 | 1 | 5 | 2494 | 4 | 6 | 2528 | 1 | 4 | 2713 | 4 | 5 |
| 2125 | 1 | 7 | 2280 | 4 | 8 | 2329 | 1 | 6 | 2499 | 4 | 7 | 2533 | 1 | 5 | 2718 | 4 | 6 |
| 2130 | 1 | 8 | 2285 | 4 | 9 | 2334 | 1 | 7 | 2504 | 4 | 8 | 2538 | 1 | 6 | 2723 | 4 | 7 |
| 2135 | 1 | 9 | 2290 | 5 | 0 | 2339 | 1 | 8 | 2509 | 4 | 9 | 2543 | 1 | 7 | 2728 | 4 | 8 |
| 2140 | 2 | 0 | 2295 | 5 | 1 | 2344 | 1 | 9 | 2514 | 4 | 10 | 2548 | 1 | 8 | 2733 | 4 | 9 |
| 2145 | 2 | 1 | 2300 | 5 | 2 | 2349 | 1 | 10 | 2519 | 5 | 0 | 2553 | 1 | 9 | 2738 | 4 | 10 |
| 2150 | 2 | 2 | 2305 | 5 | 3 | 2354 | 2 | 0 | 2524 | 5 | 1 | 2558 | 1 | 10 | 2743 | 4 | 11 |
| 2155 | 2 | 3 | 2310 | 5 | 4 | 2359 | 2 | 1 | 2529 | 5 | 2 | 2563 | 1 | 11 | 2748 | 5 | 0 |
| 2160 | 2 | 4 | 2315 | 5 | 5 | 2364 | 2 | 2 | 2534 | 5 | 3 | 2568 | 2 | 0 | 2753 | 5 | 1 |
| 2165 | 2 | 5 | 2320 | 5 | 6 | 2369 | 2 | 3 | 2539 | 5 | 4 | 2573 | 2 | 1 | 2758 | 5 | 2 |
| 2170 | 2 | 6 | 2325 | 5 | 7 | 2374 | 2 | 4 | 2544 | 5 | 5 | 2578 | 2 | 2 | 2763 | 5 | 3 |
| 2175 | 2 | 7 | 2330 | 5 | 8 | 2379 | 2 | 5 | 2549 | 5 | 6 | 2583 | 2 | 3 | 2768 | 5 | 4 |
| 2180 | 2 | 8 | 2335 | 5 | 9 | 2384 | 2 | 6 | 2554 | 5 | 7 | 2588 | 2 | 4 | 2773 | 5 | 5 |
| 2185 | 2 | 9 | 2340 | 6 | 0 | 2389 | 2 | 7 | 2559 | 5 | 8 | 2593 | 2 | 5 | 2778 | 5 | 6 |
| 2190 | 3 | 0 | | | | 2394 | 2 | 8 | 2564 | 5 | 9 | 2598 | 2 | 6 | 2783 | 5 | 7 |
| | | | | | | 2399 | 2 | 9 | 2569 | 5 | 10 | 2603 | 2 | 7 | 2788 | 5 | 8 |
| | | | | | | 2404 | 2 | 10 | 2574 | 6 | 0 | 2608 | 2 | 8 | 2793 | 5 | 9 |
| | | | | | | 2409 | 3 | 0 | | | | 2613 | 2 | 9 | 2798 | 5 | 10 |
| | | | | | | | | | | | | 2618 | 2 | 10 | 2803 | 5 | 11 |
| | | | | | | | | | | | | 2623 | 2 | 11 | 2808 | 6 | 0 |
| | | | | | | | | | | | | 2628 | 3 | 0 | | | |

## ∅ 120 cm

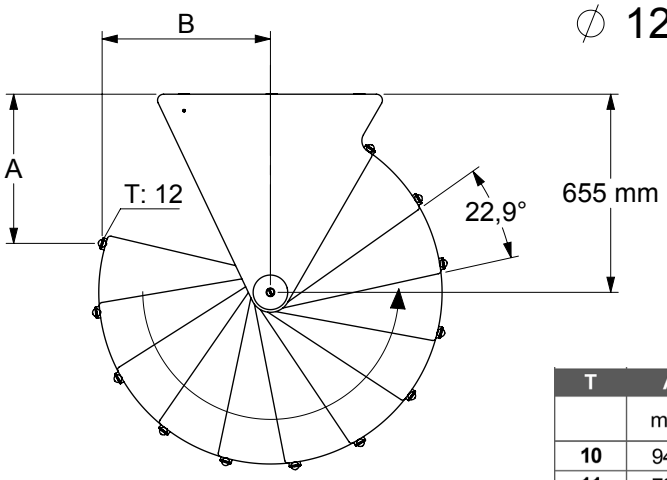


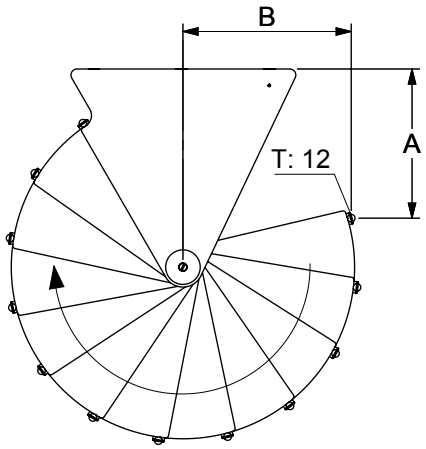


| T | A | B |
|---|---|---|
| | mm | mm |
| **10** | 941 | 506 |
| **11** | 722 | 578 |
| **12** | 493 | 558 |

## ∅ 140 cm

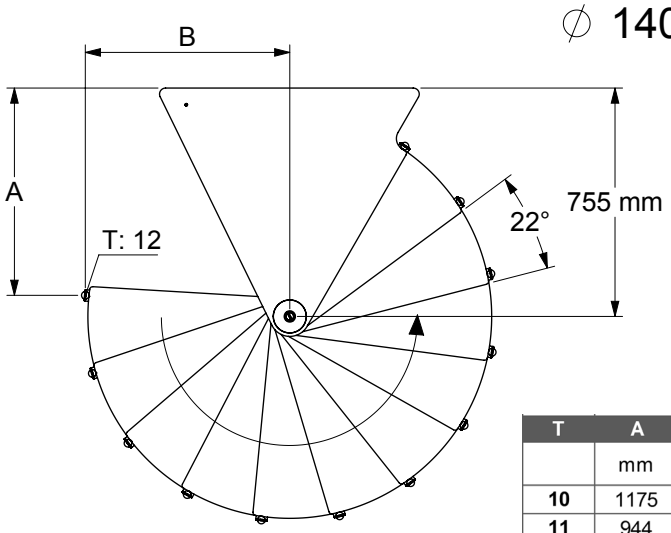


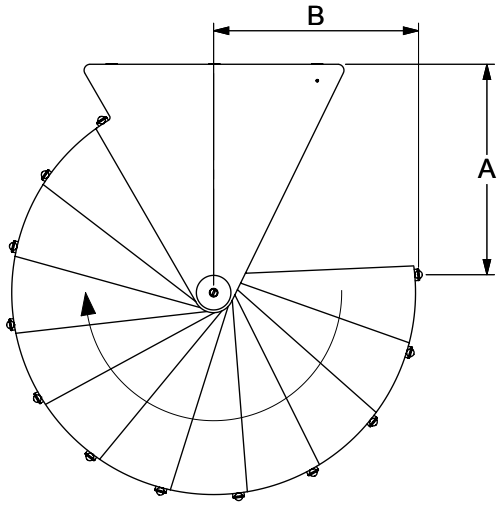


| T | A | B |
|---|---|---|
| | mm | mm |
| **10** | 1175 | 537 |
| **11** | 944 | 655 |
| **12** | 685 | 678 |

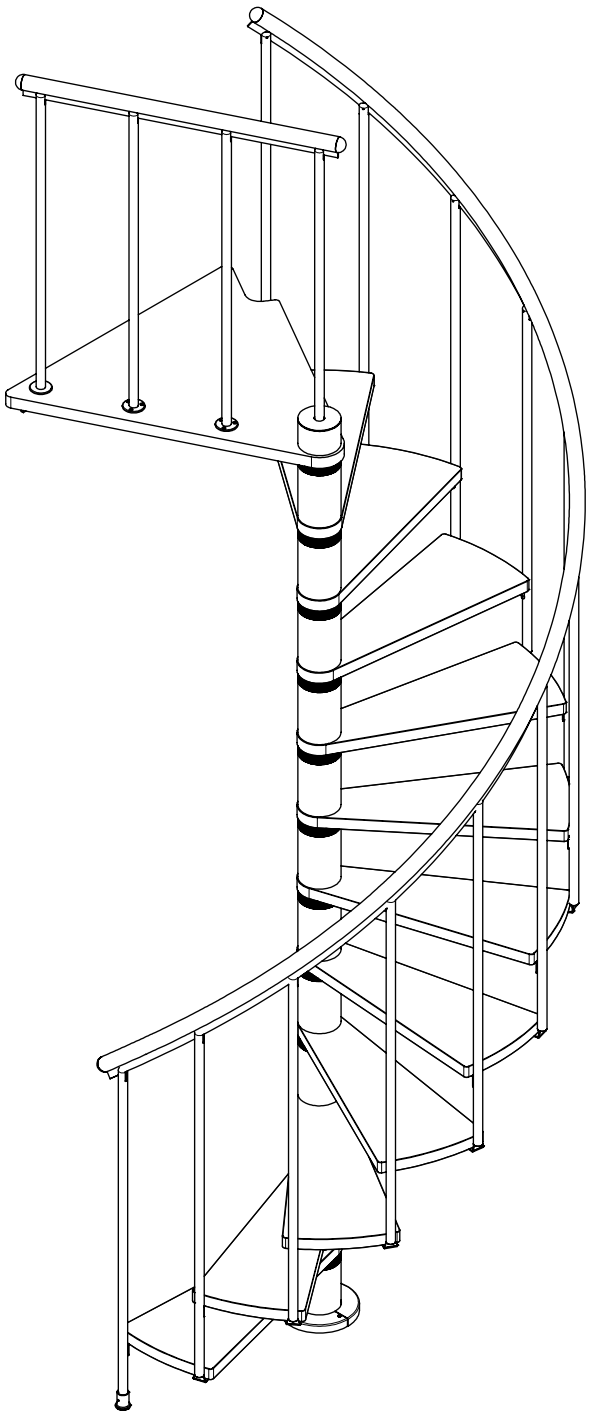

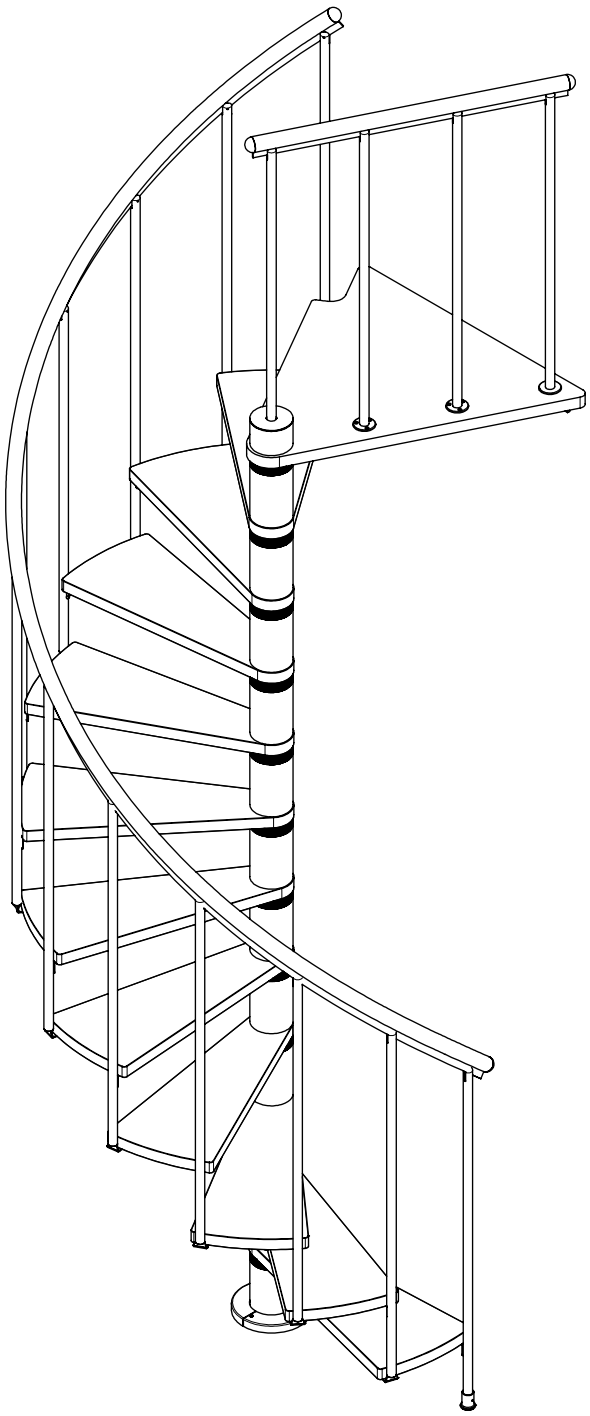

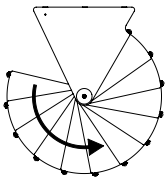

Left
Links
Gauche

1 L

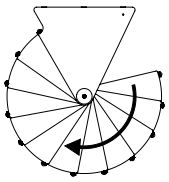

Right
Recht
Droite

1 R

1 L

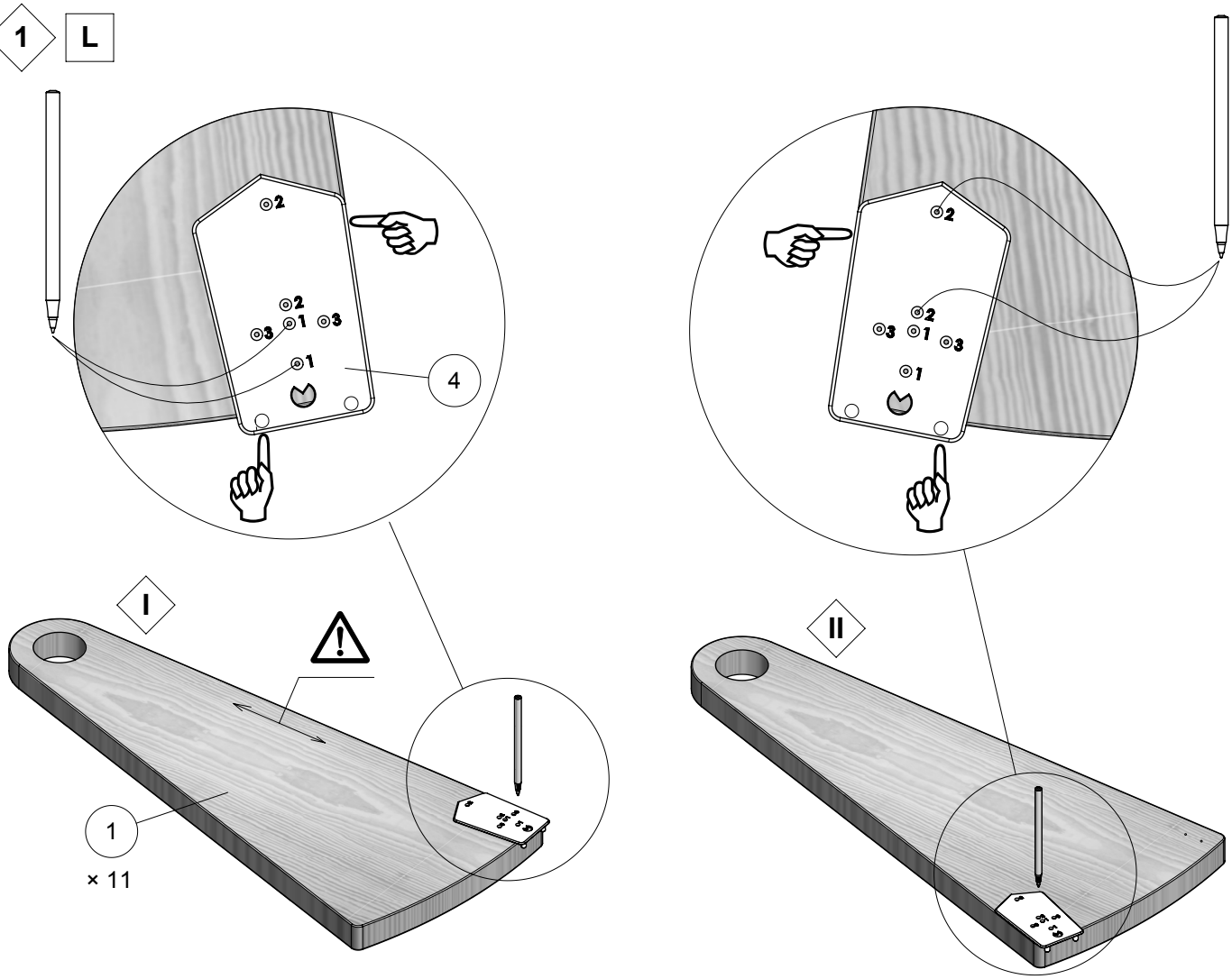


2 L

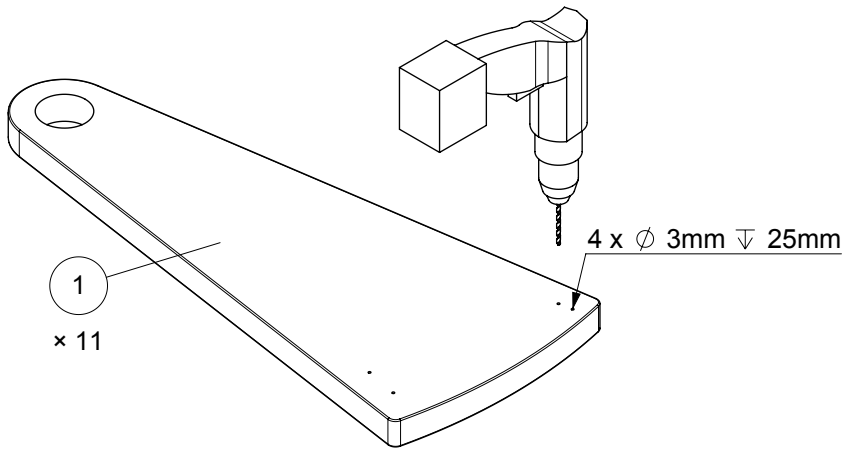


3 L

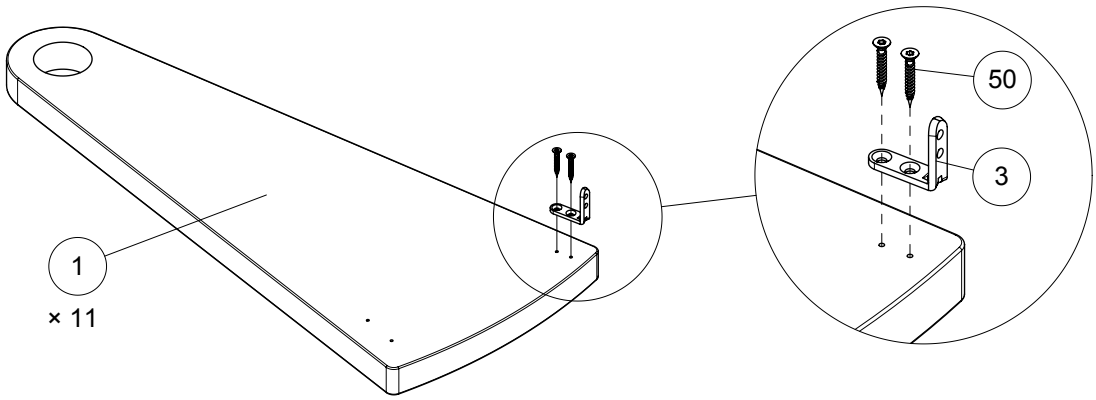

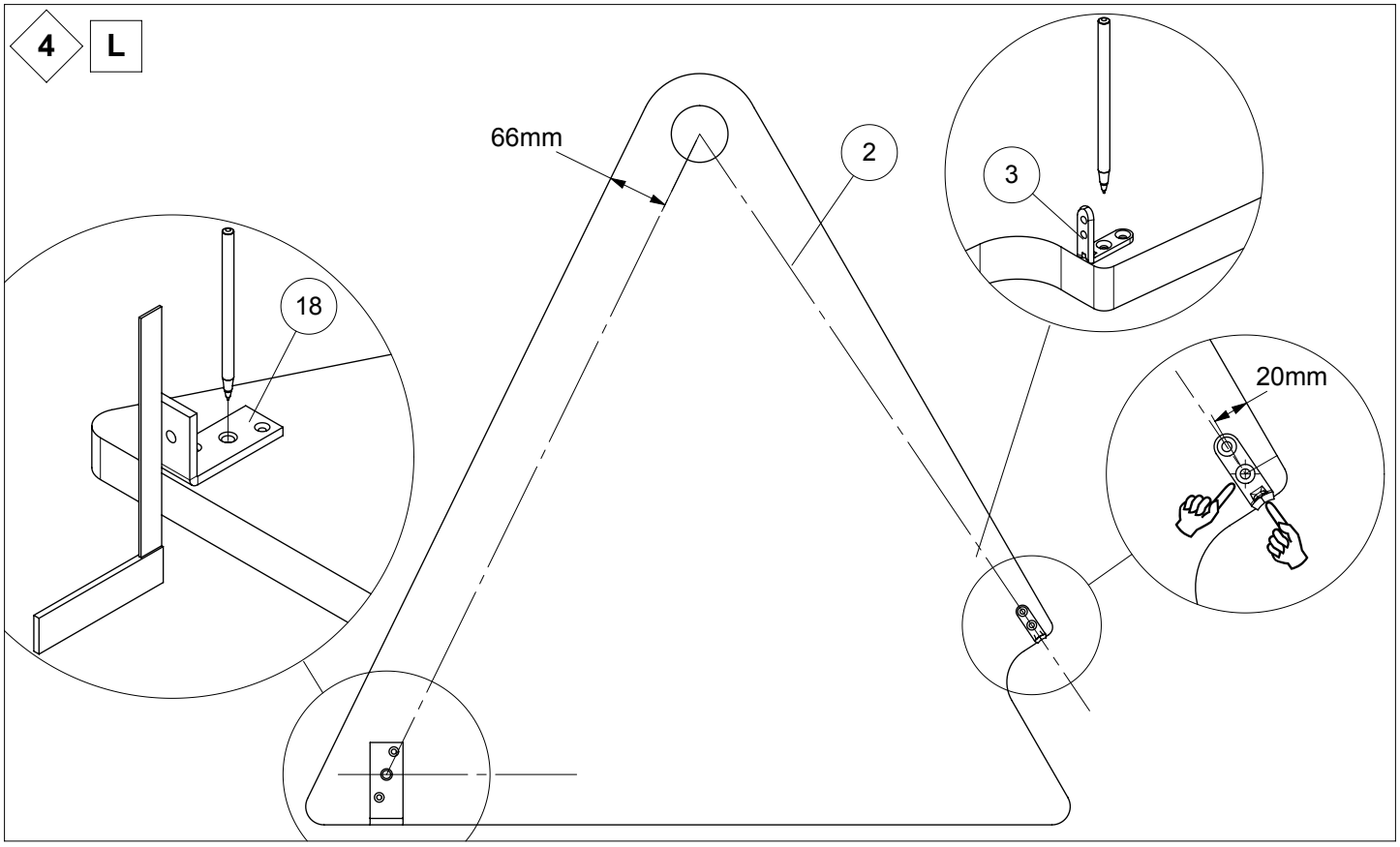
4
L
66mm
2
3
18
20mm

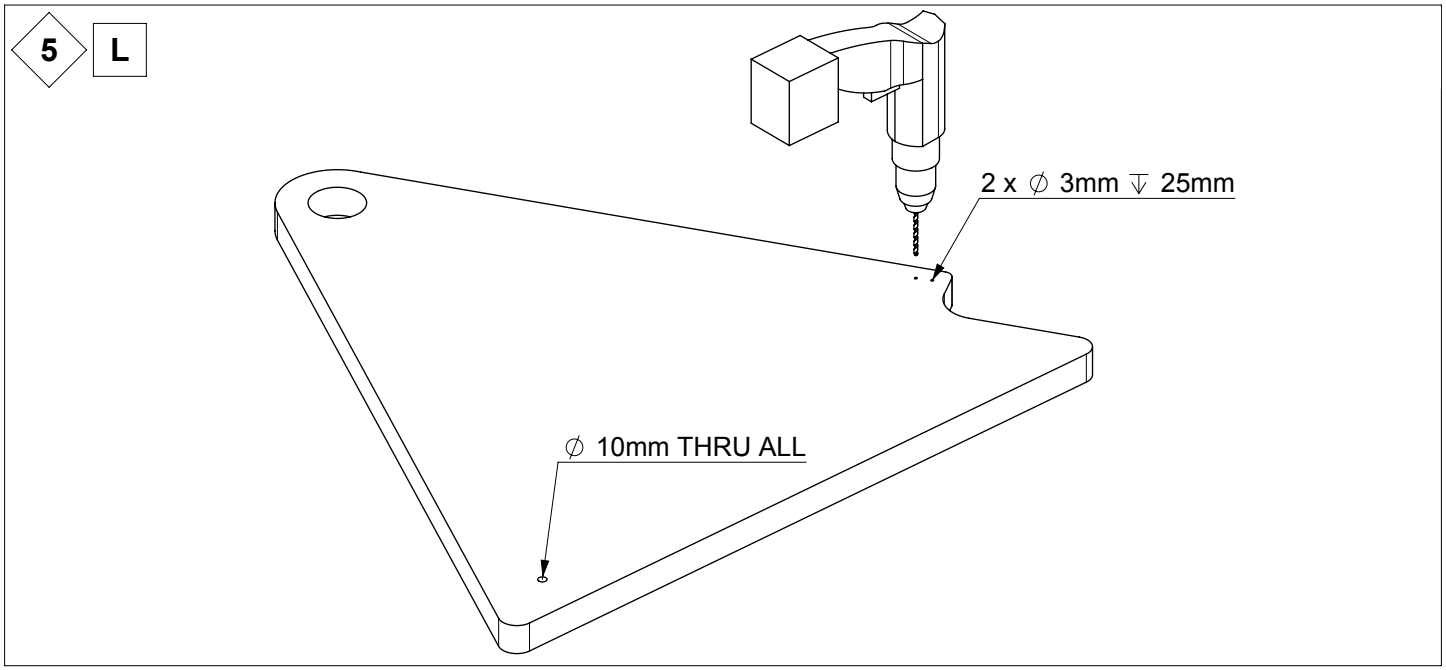
5
L
2 x ∅ 3mm ↧ 25mm
∅ 10mm THRU ALL

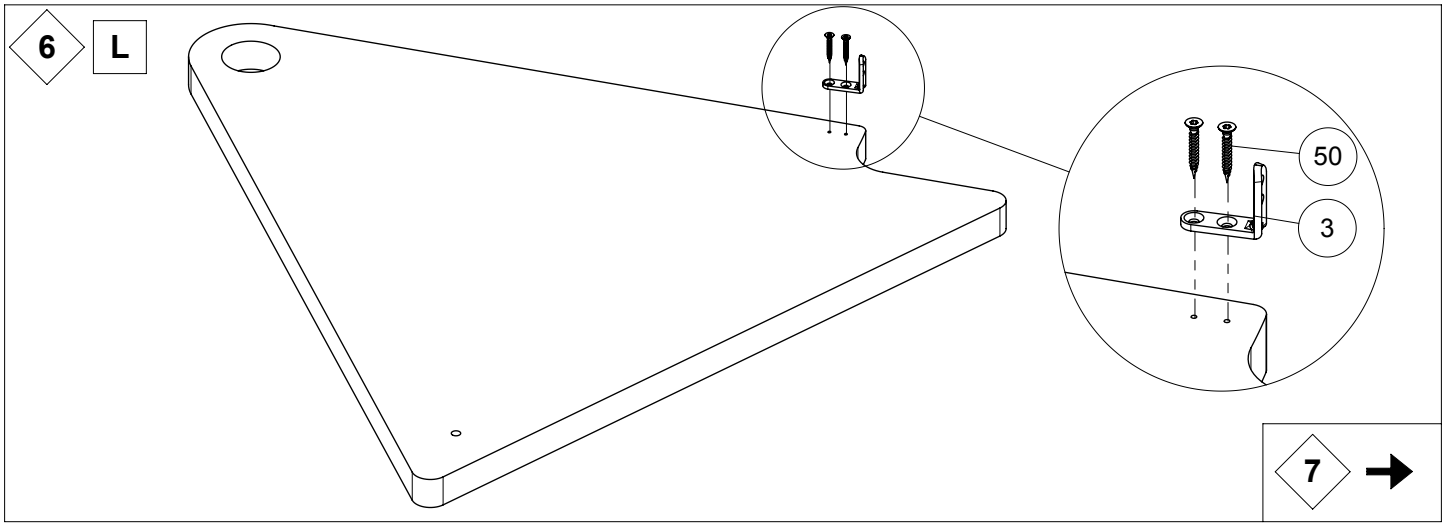
6
L
50
3
7

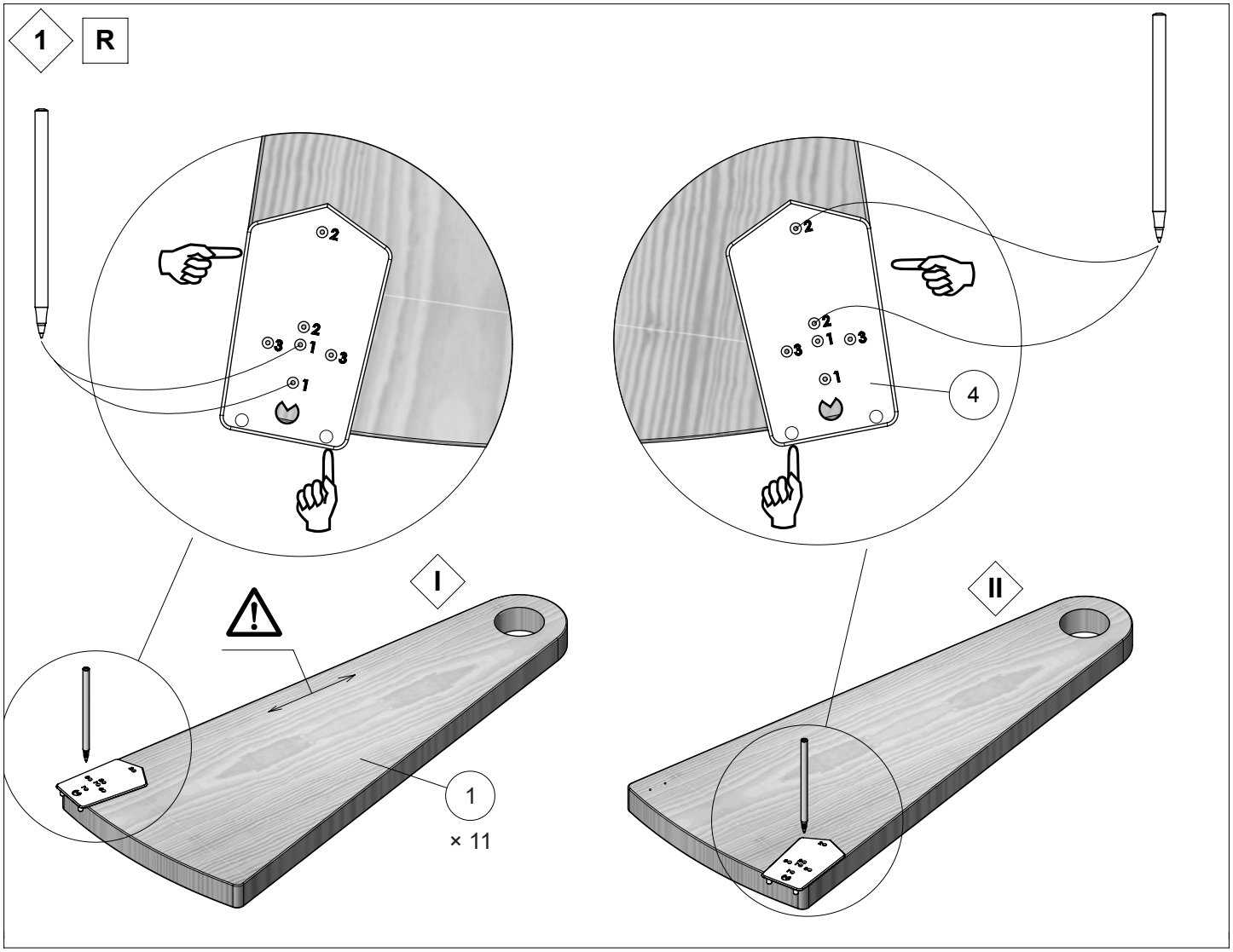
1
R
2
3
1
4
I
II
1
× 11

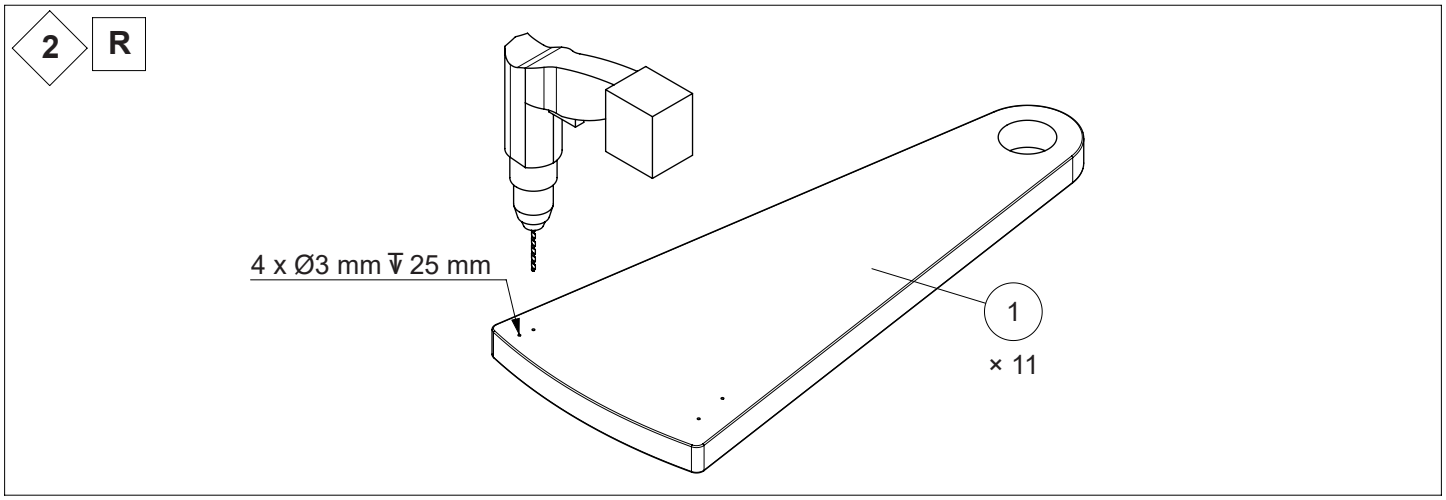
2
R
4 x Ø3 mm ↧ 25 mm
1
× 11

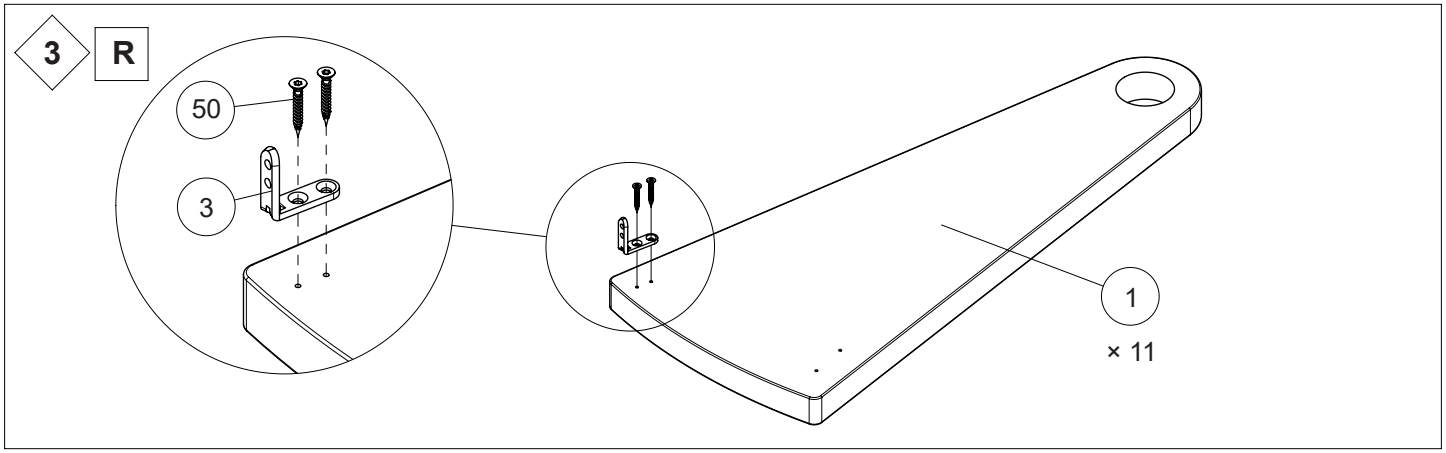
3
R
50
3
1
× 11

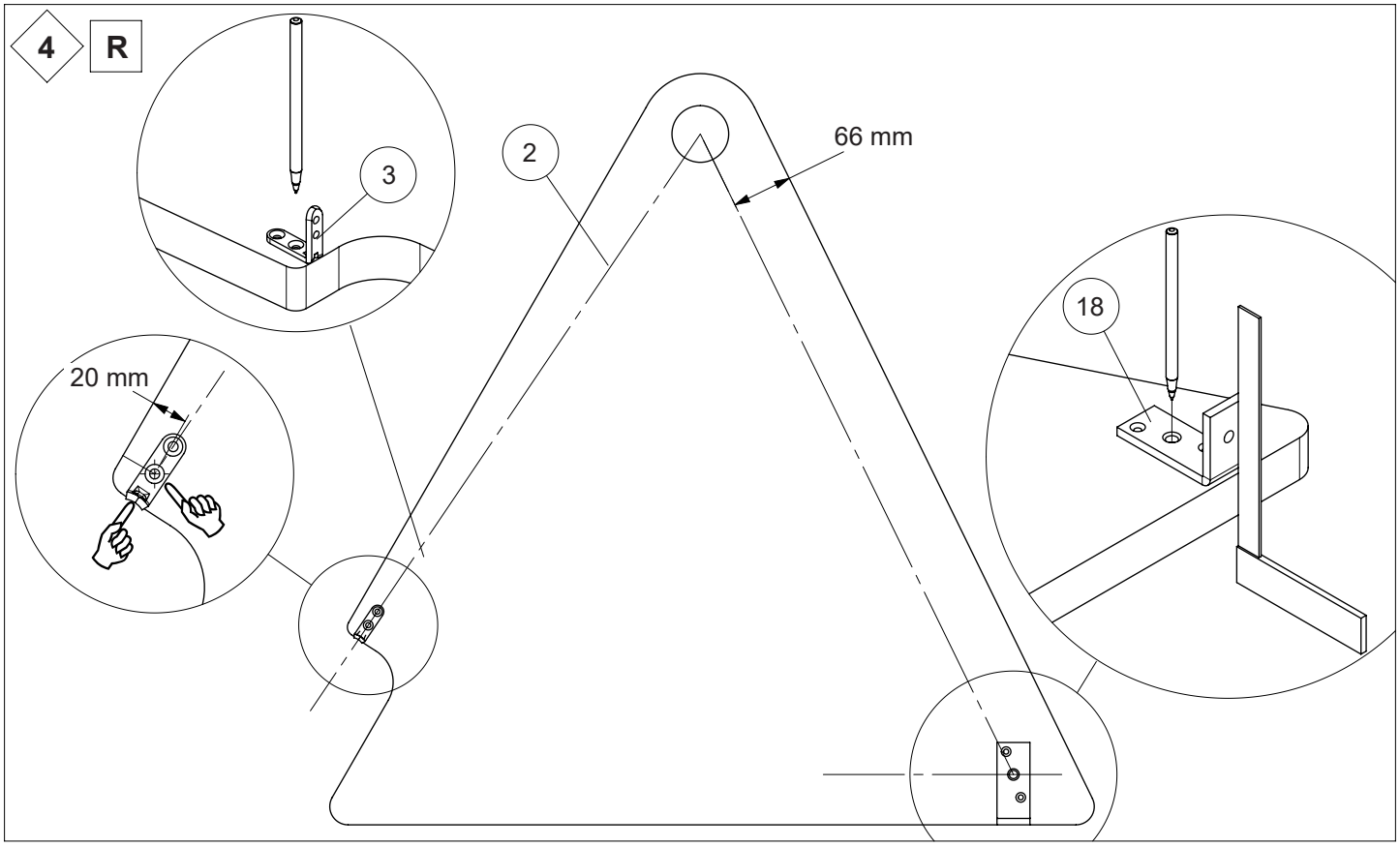
4
R
3
2
66 mm
18
20 mm

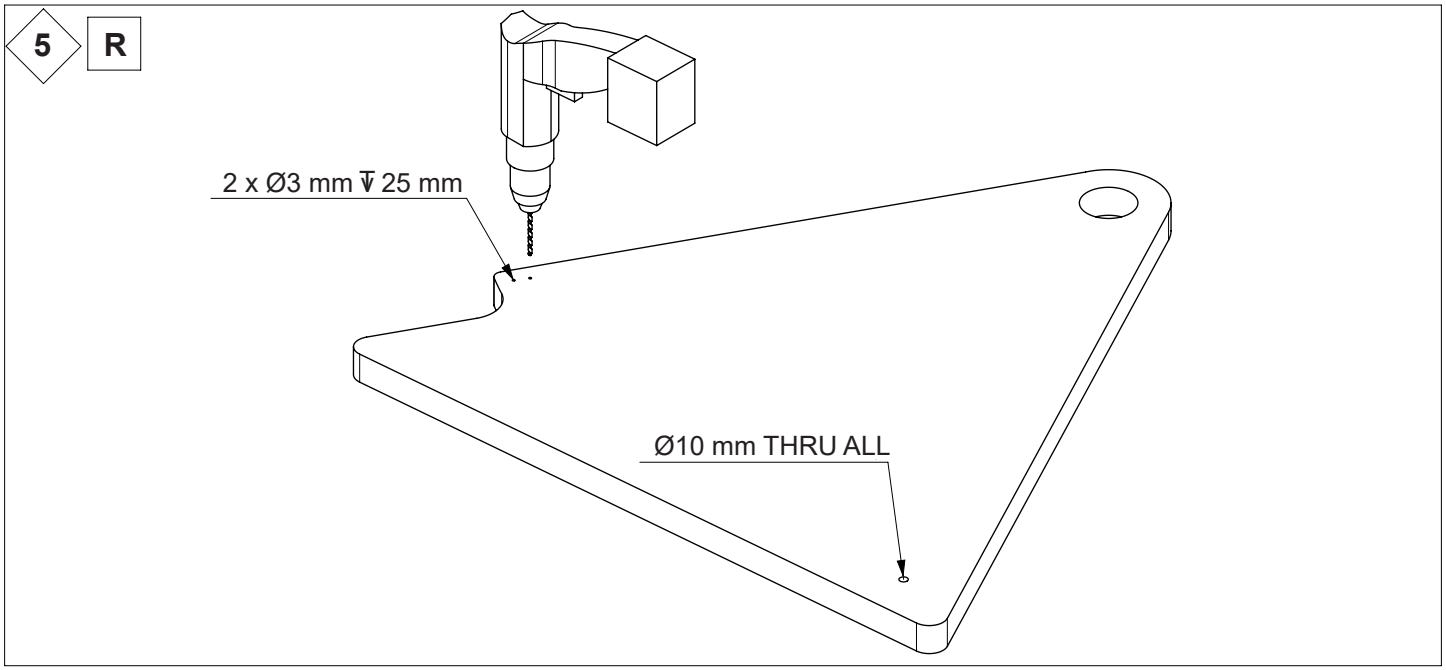
5
R
2 x Ø3 mm ↧ 25 mm
Ø10 mm THRU ALL

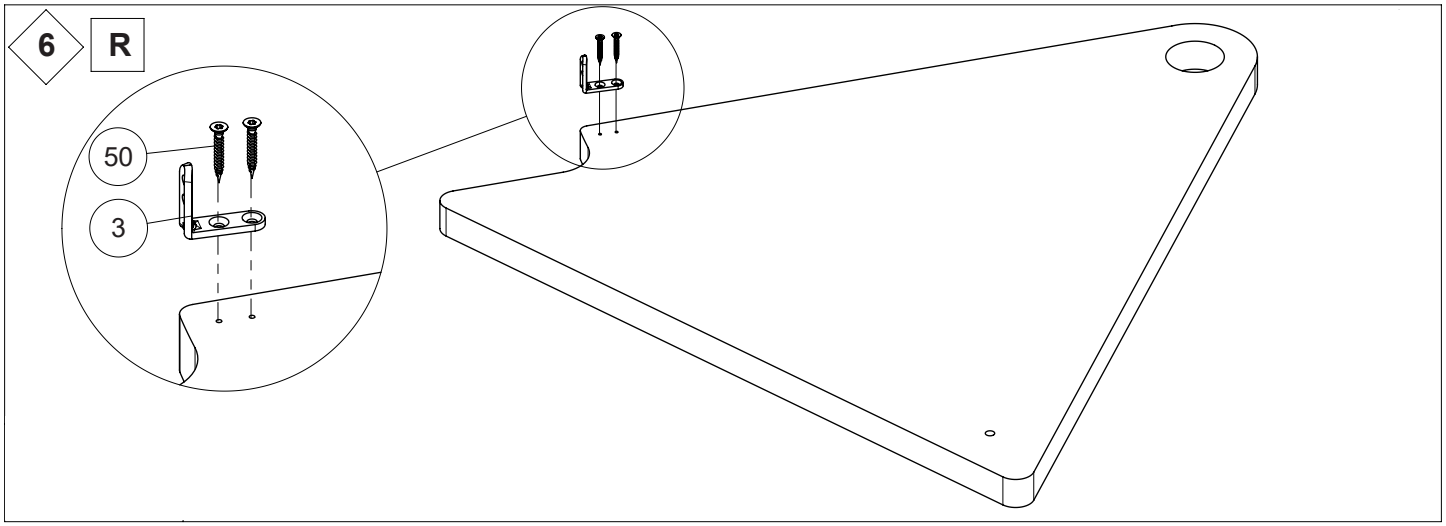
6
R
50
3

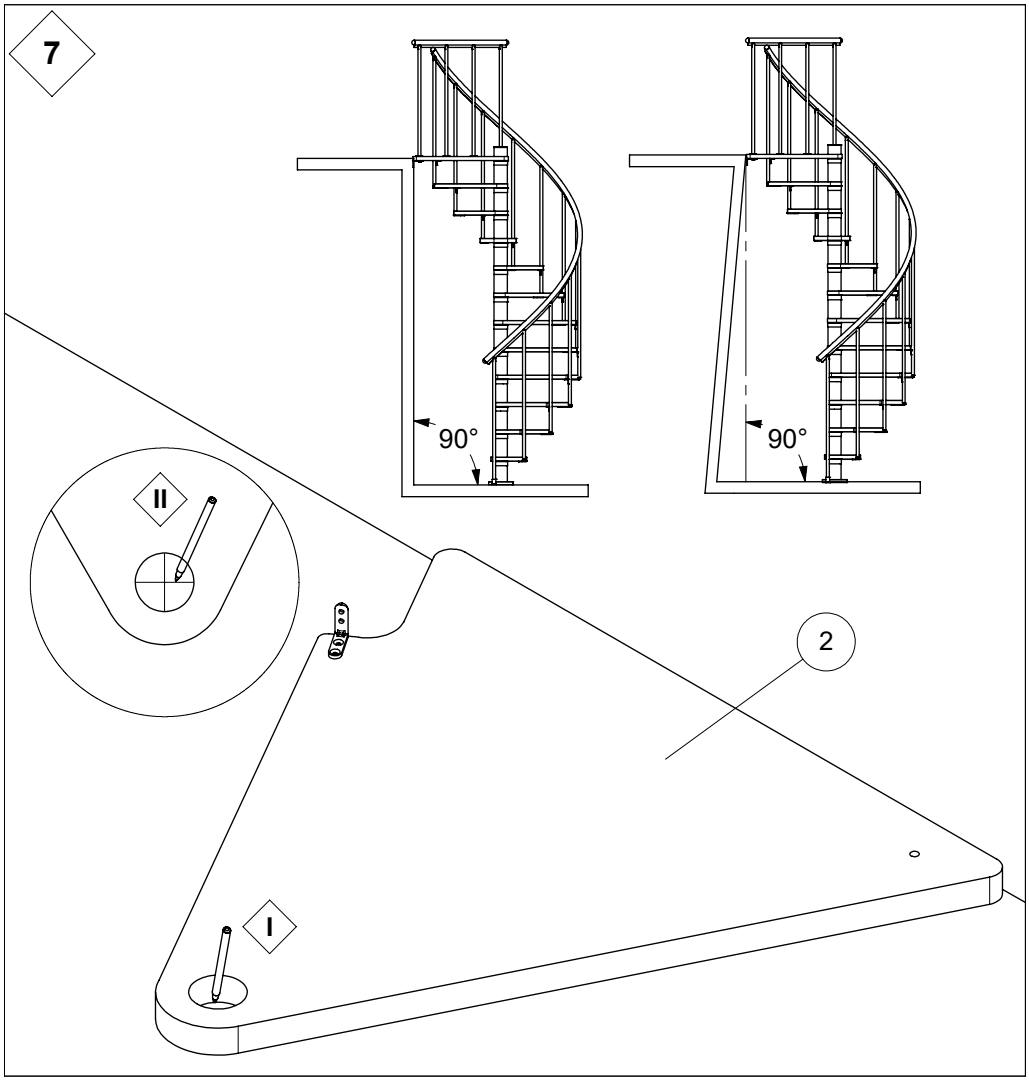
7
90°
90°
II
2
I

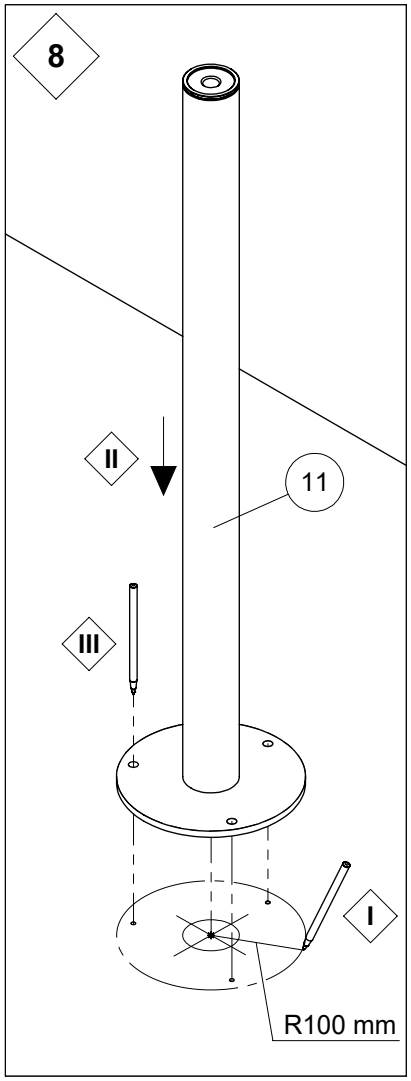
8
II
11
III
I
R100 mm

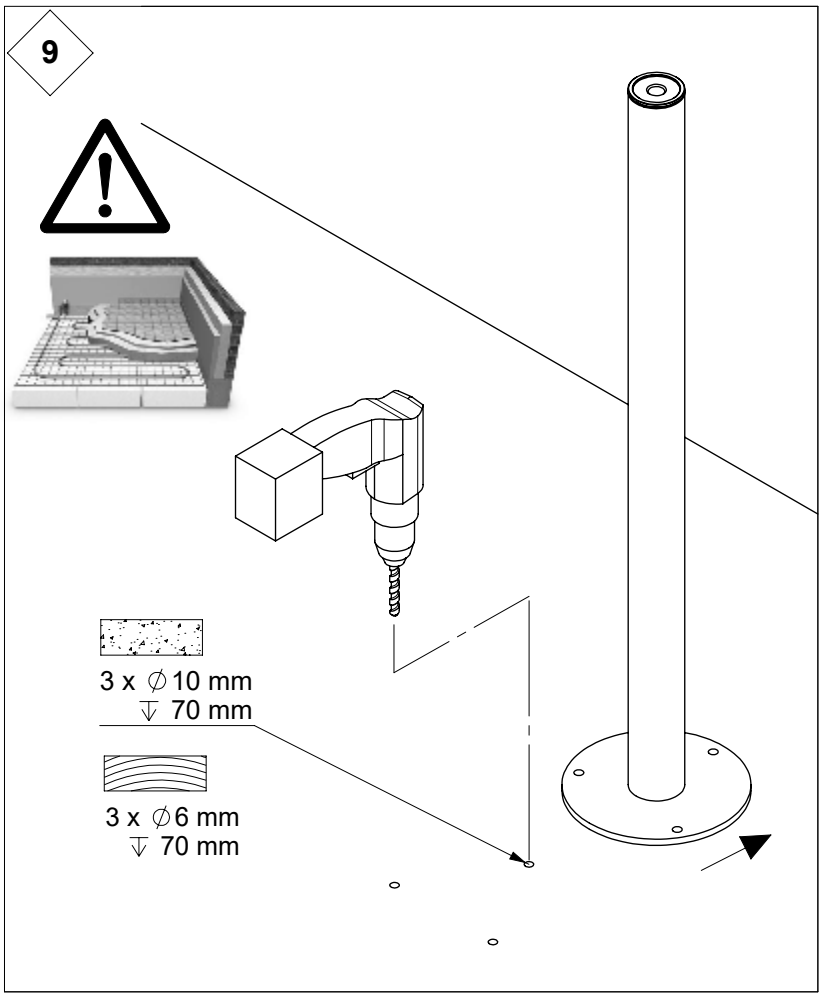
9
3 x ∅10 mm
⊽ 70 mm
3 x ∅6 mm
⊽ 70 mm

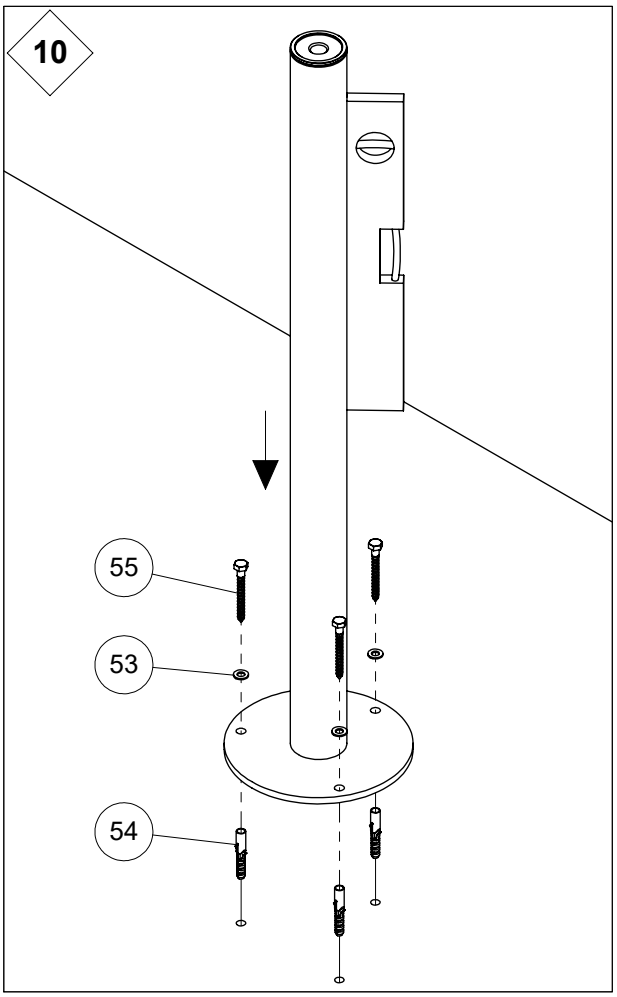
10
55
53
54

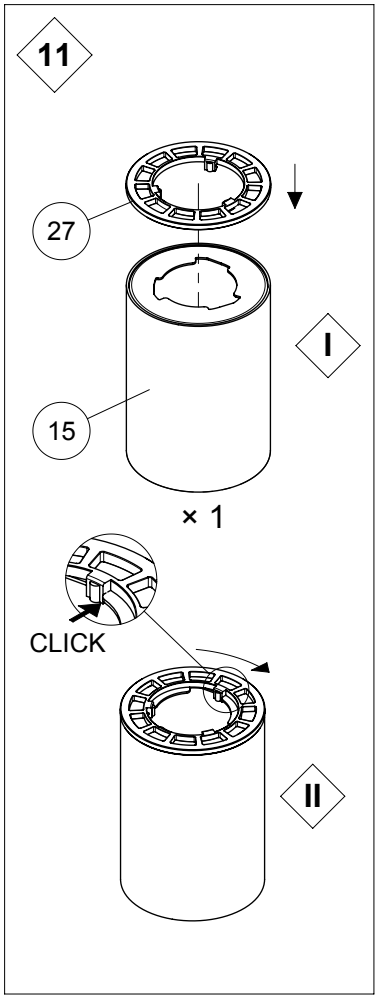
11
27
15
I
× 1
CLICK
II

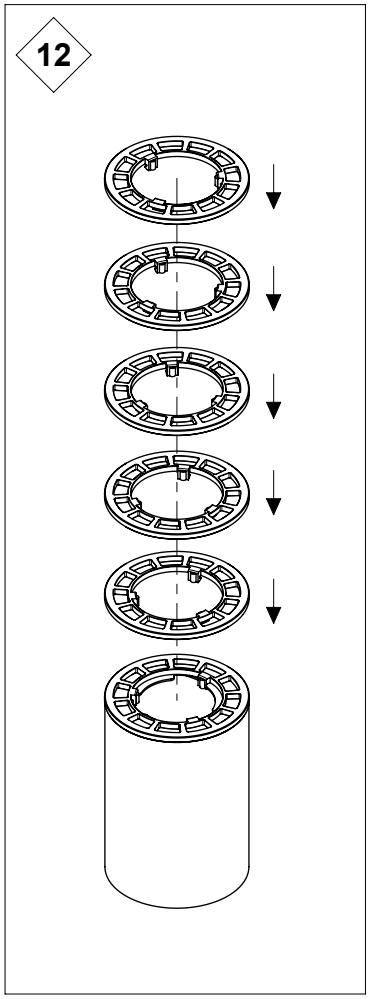
12

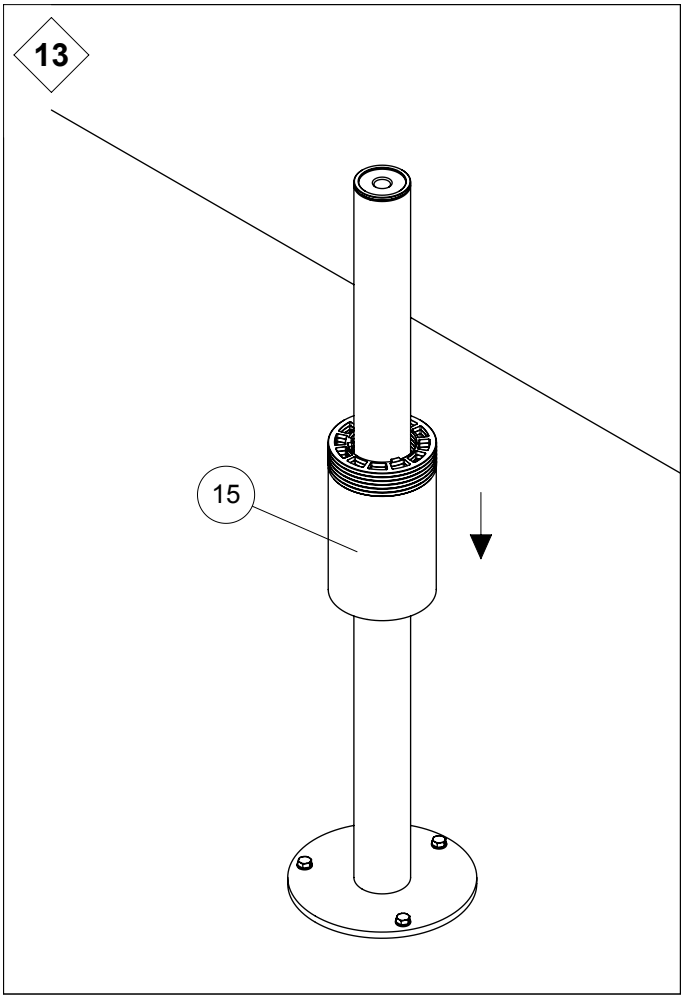
13
15

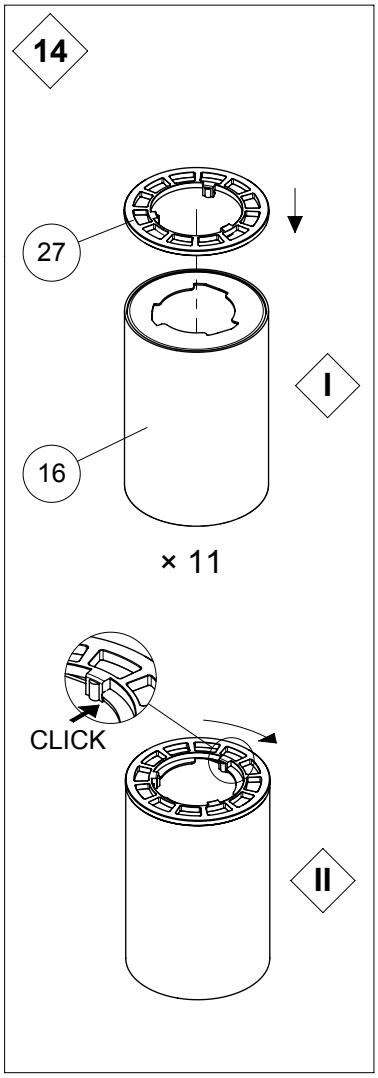
14
27
16
I
× 11
CLICK
II

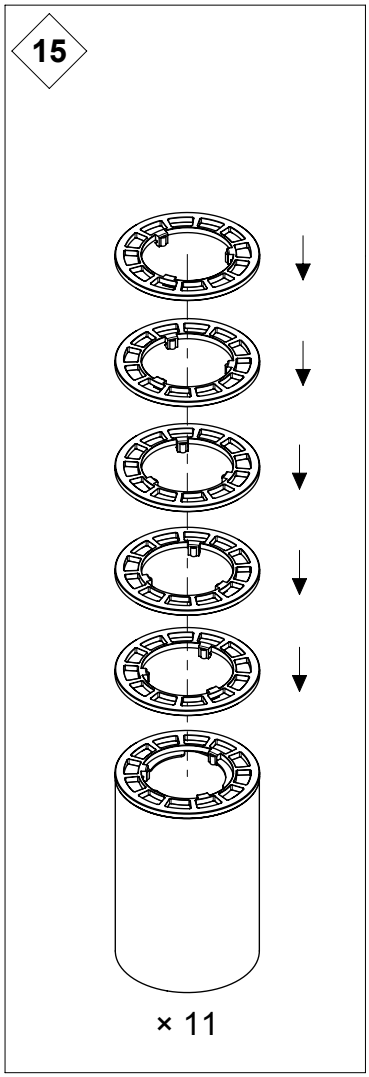
15
× 11

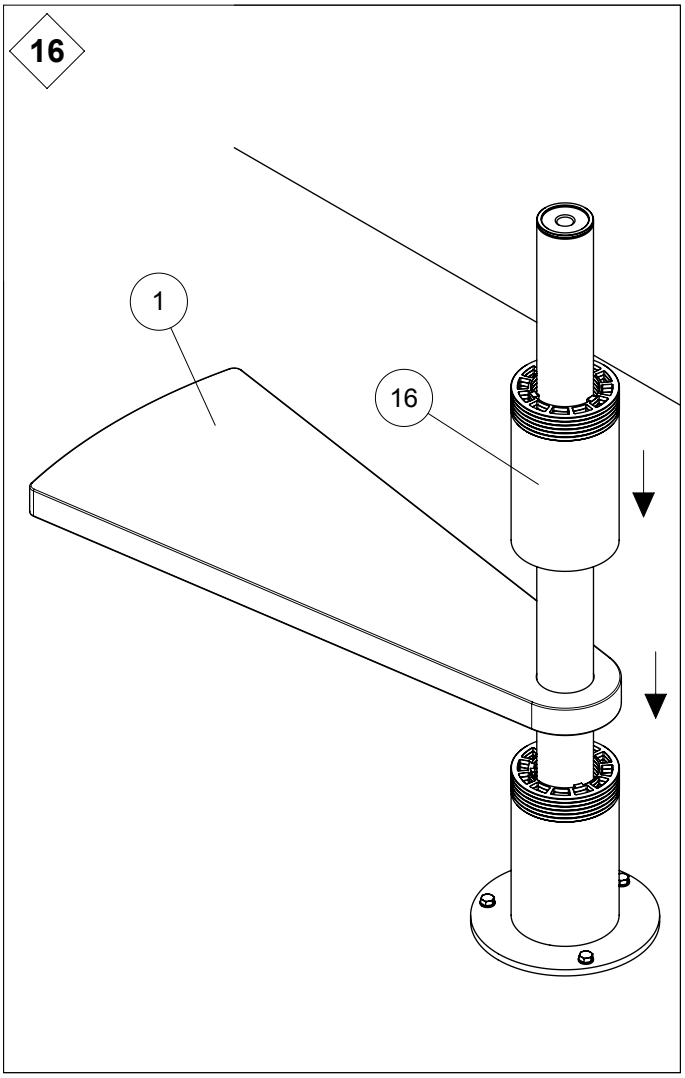
16
1
16

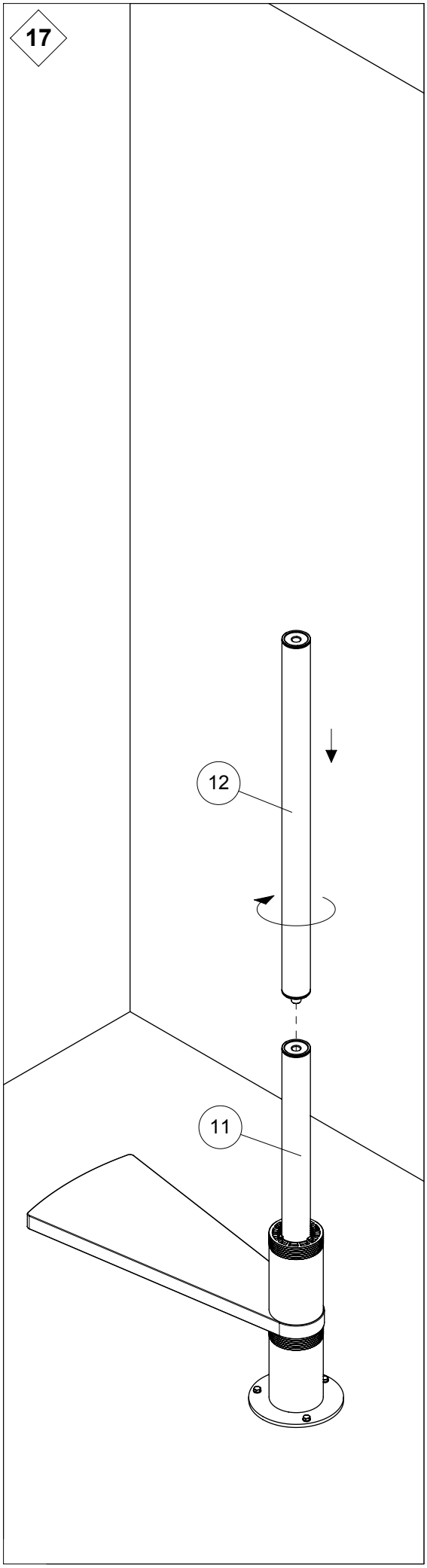
17
12
11

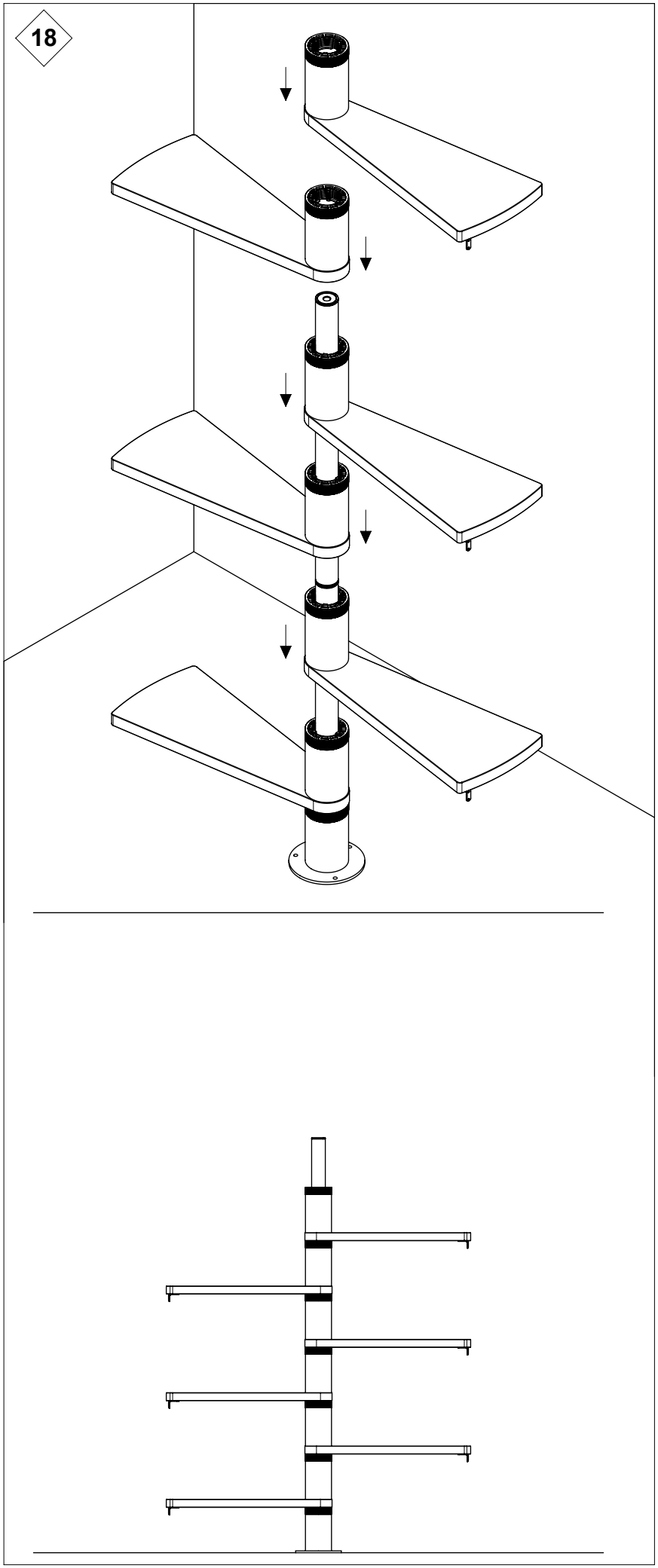
18

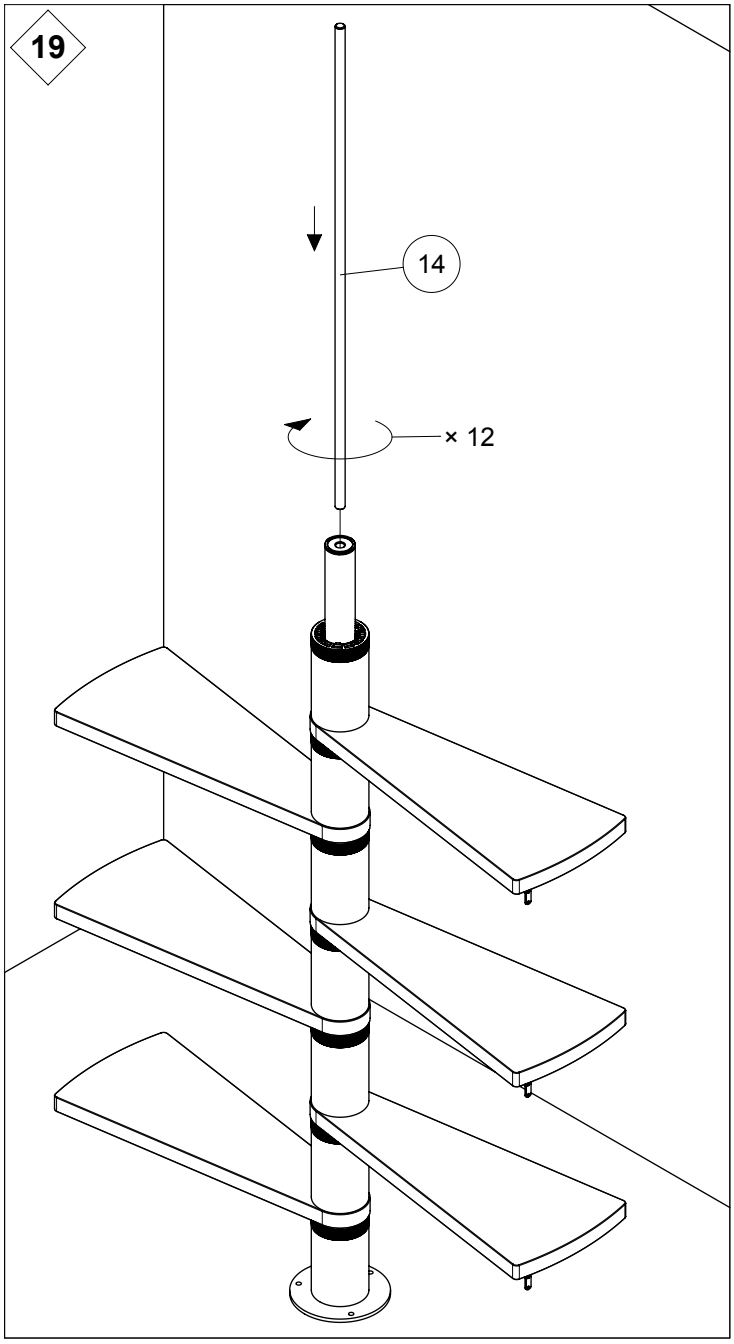
19
14
× 12

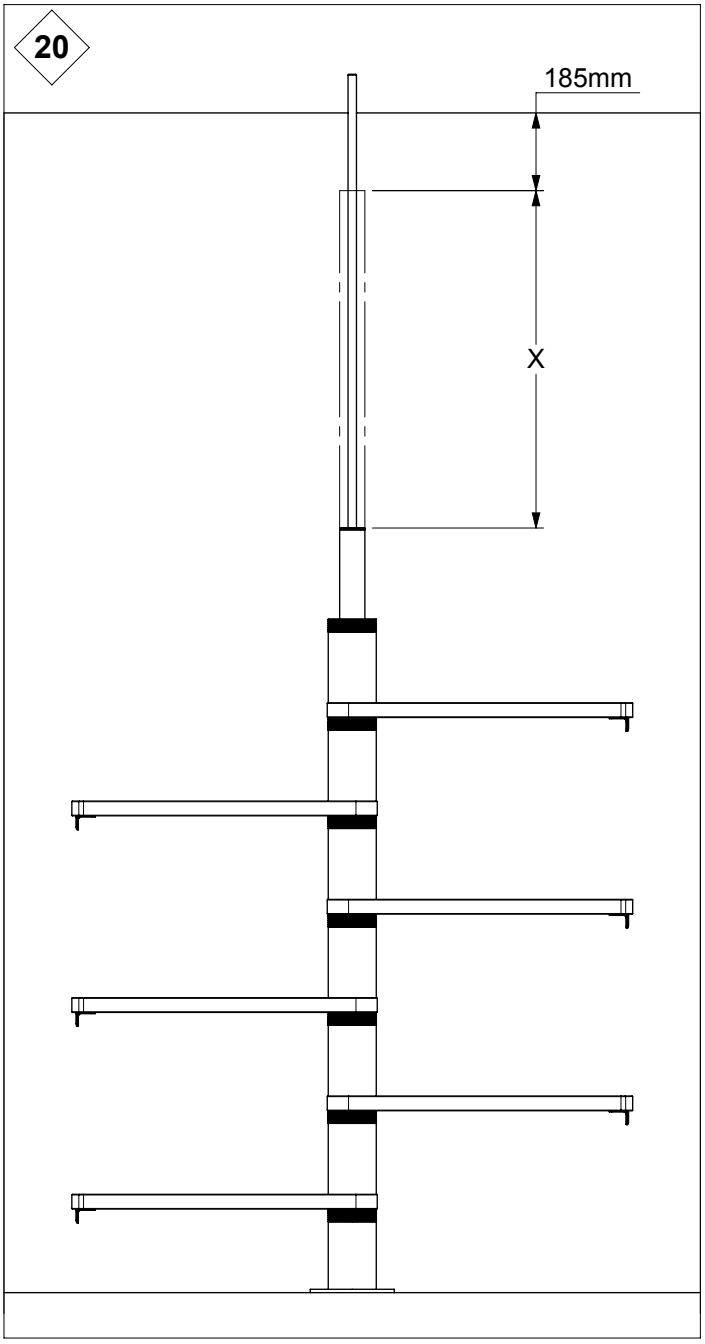
20
185mm
X

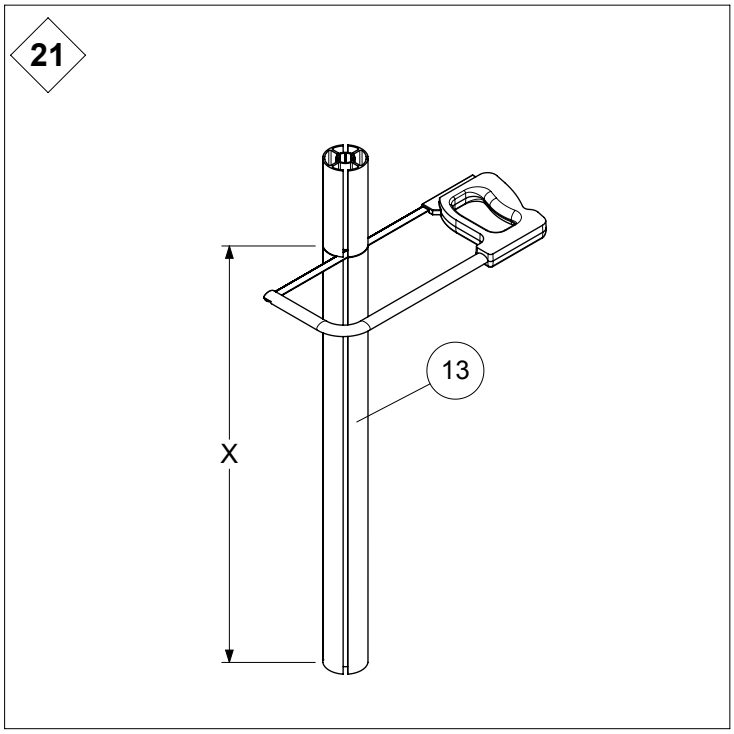
21
13
X

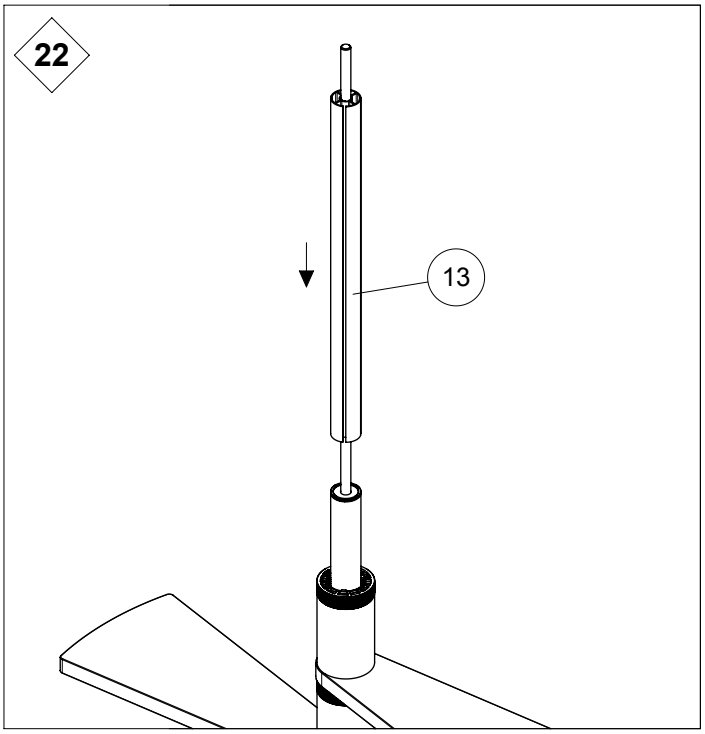
22
13

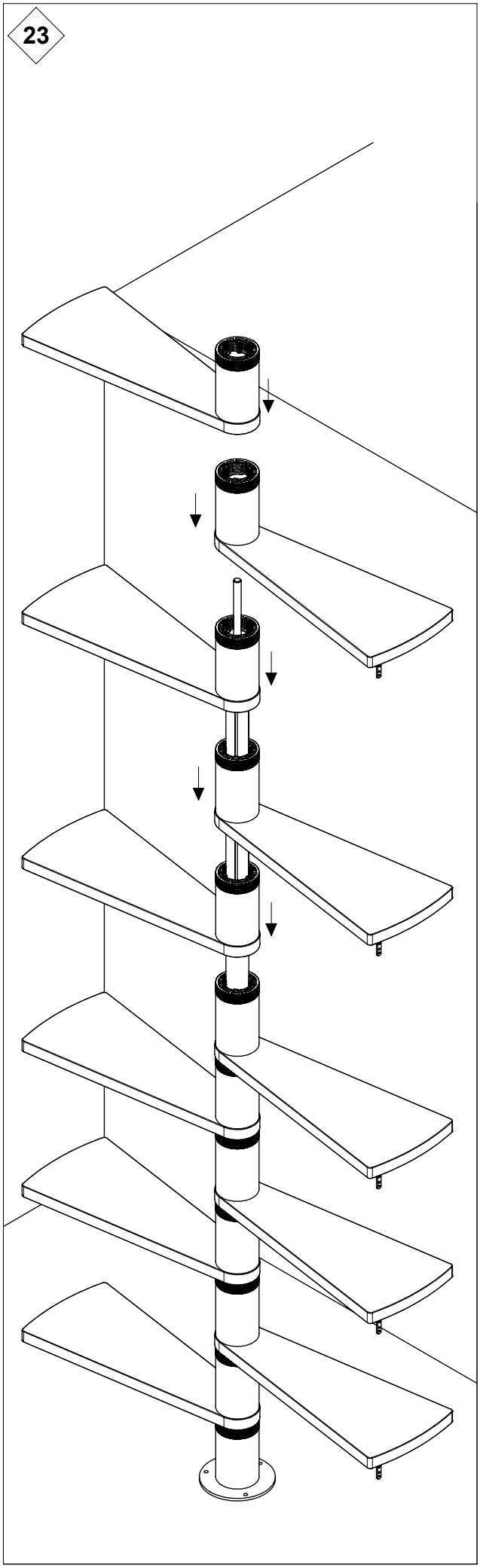
23

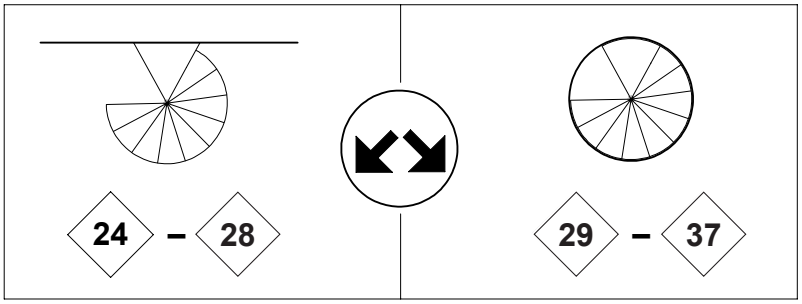
24 – 28
29 – 37

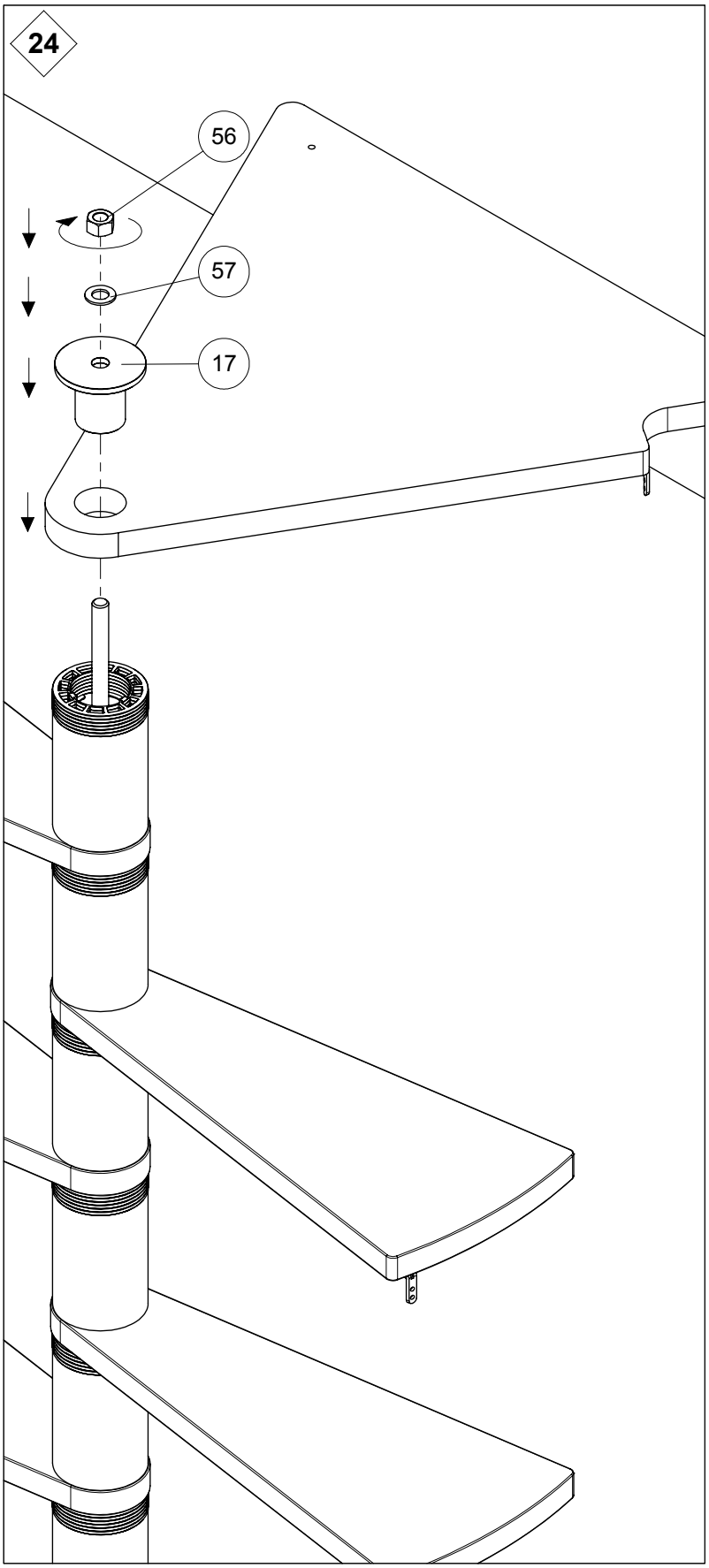
24
56
57
17

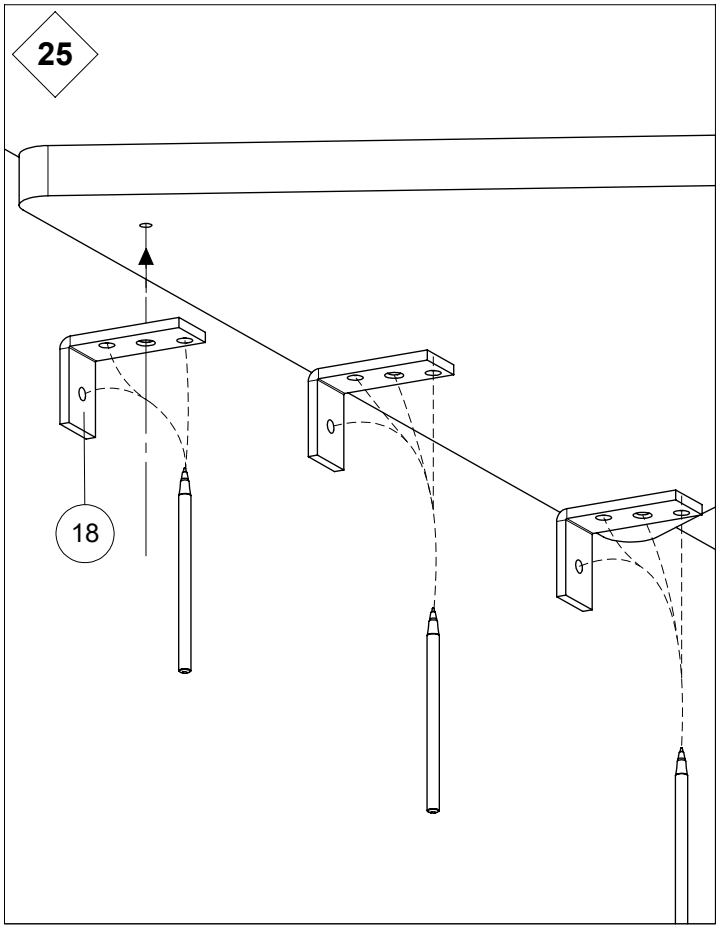
25
18

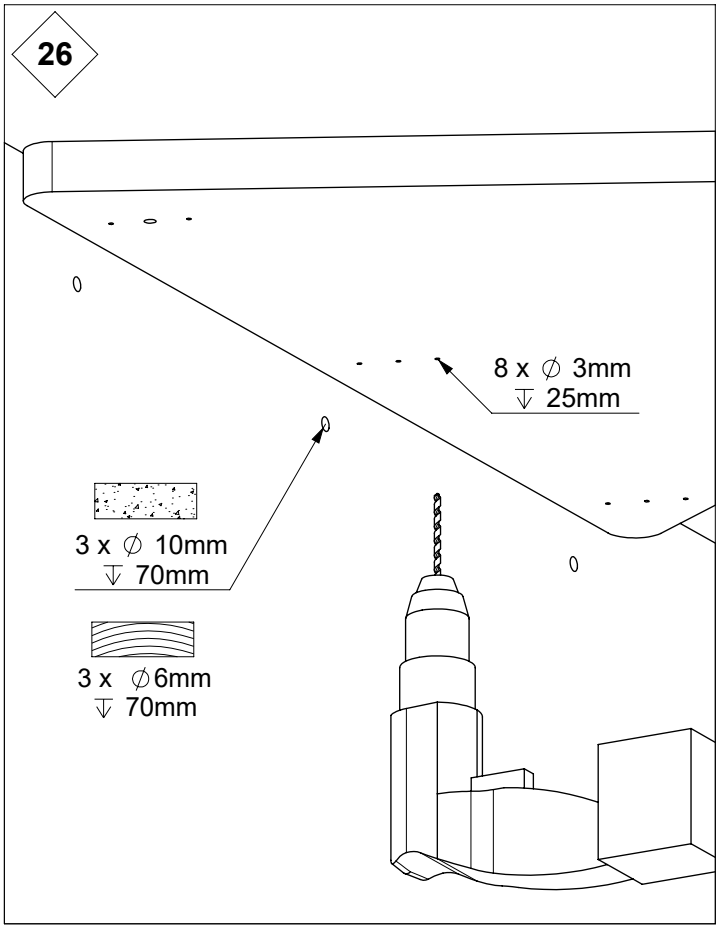
26
8 x ∅ 3mm
⇓ 25mm
3 x ∅ 10mm
⇓ 70mm
3 x ∅6mm
⇓ 70mm

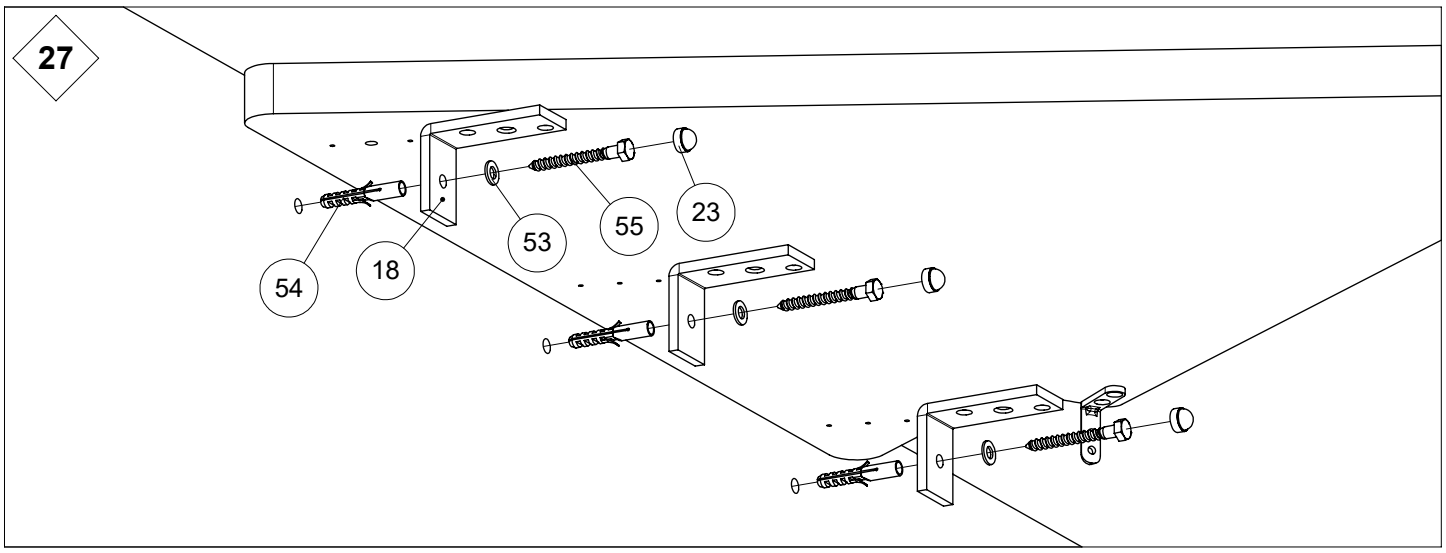
27
54
18
53
55
23

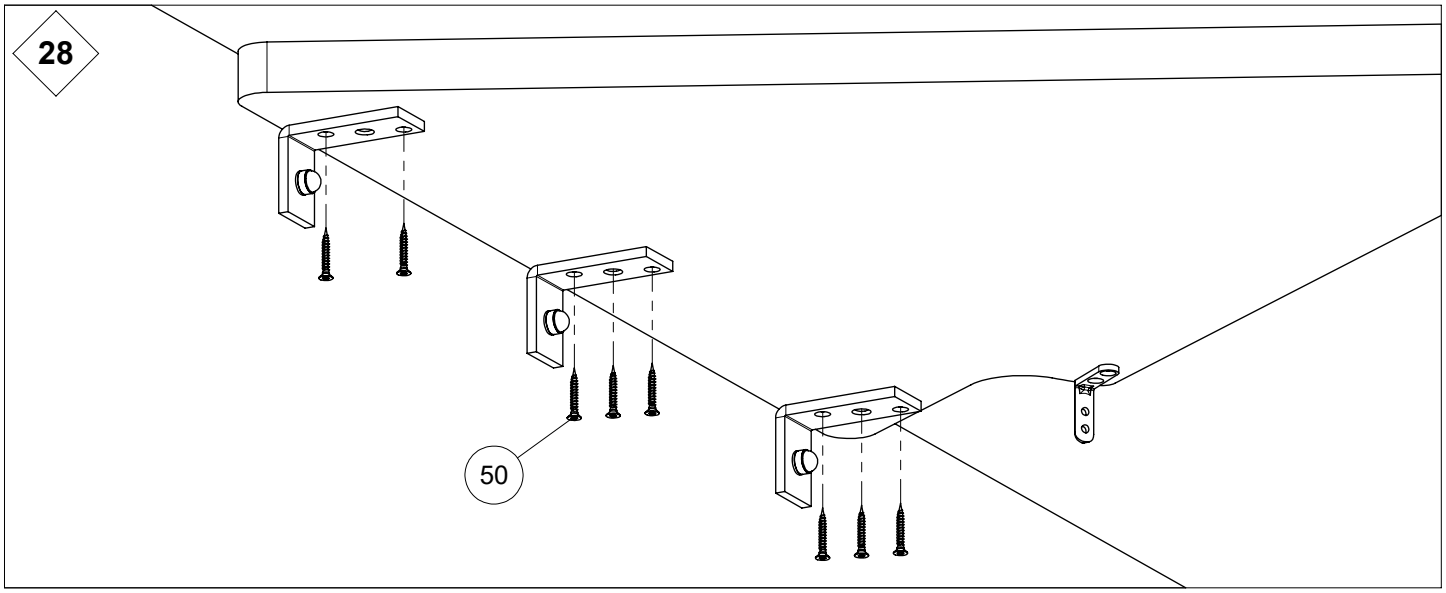
28
50

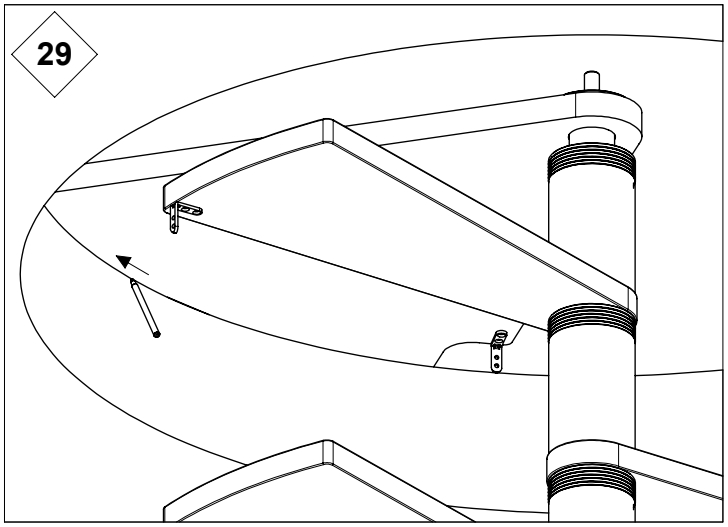
29

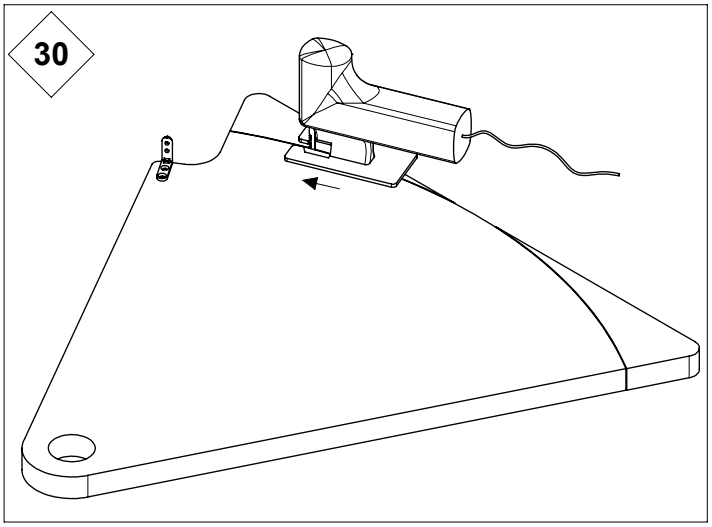
30

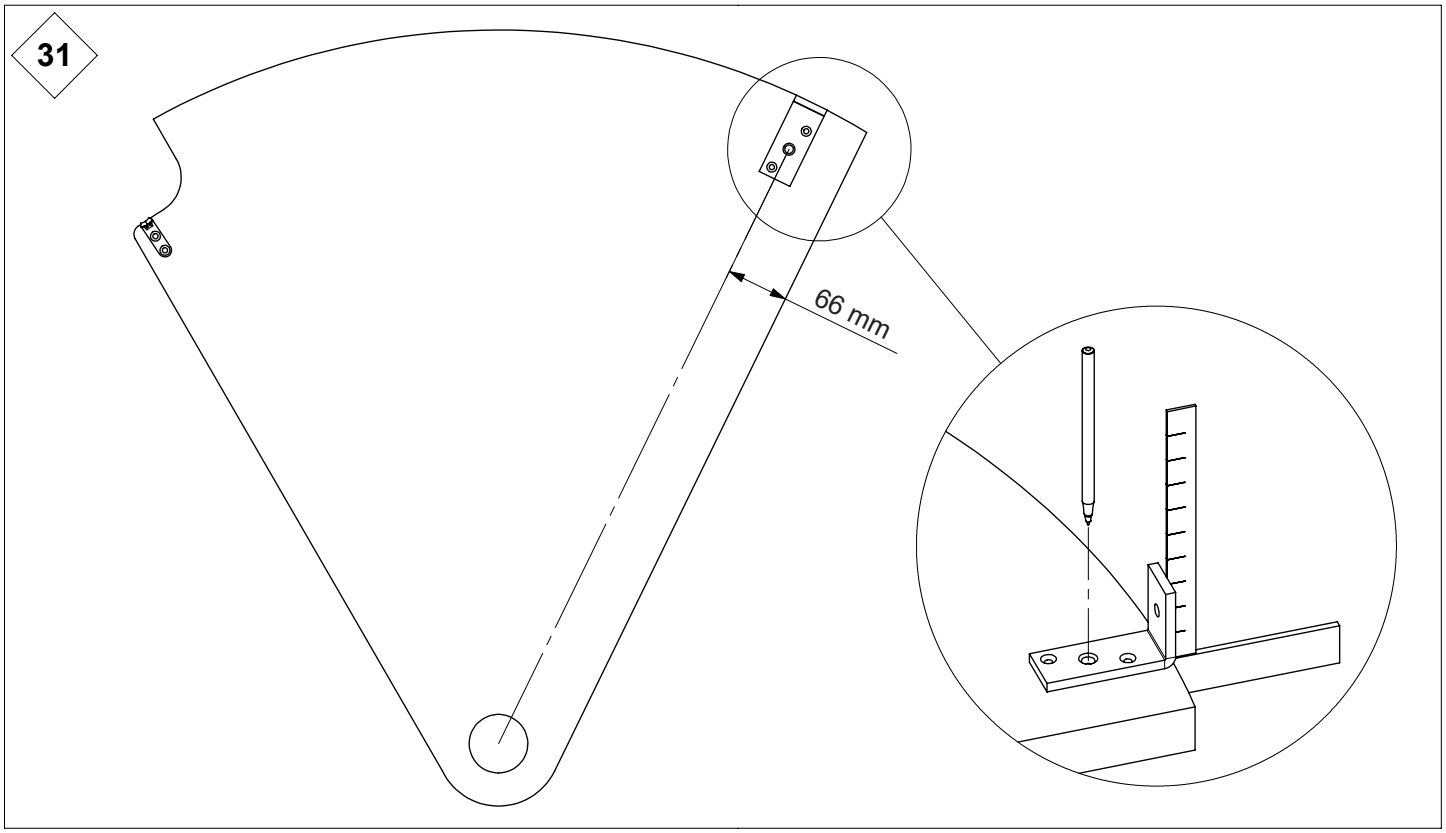
31
66 mm

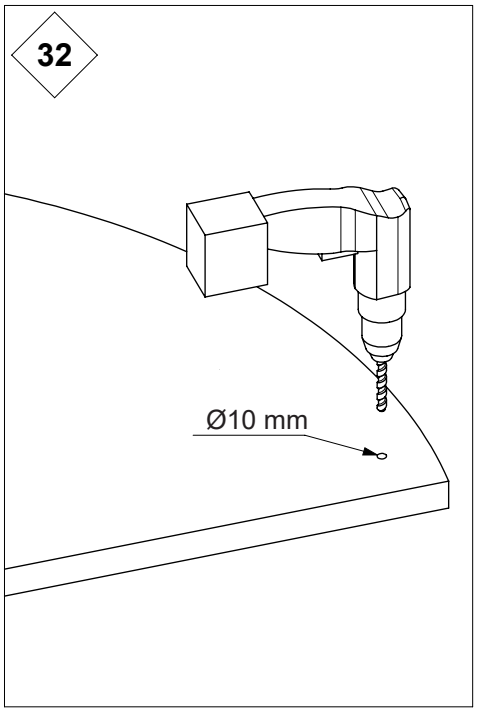
32
Ø10 mm

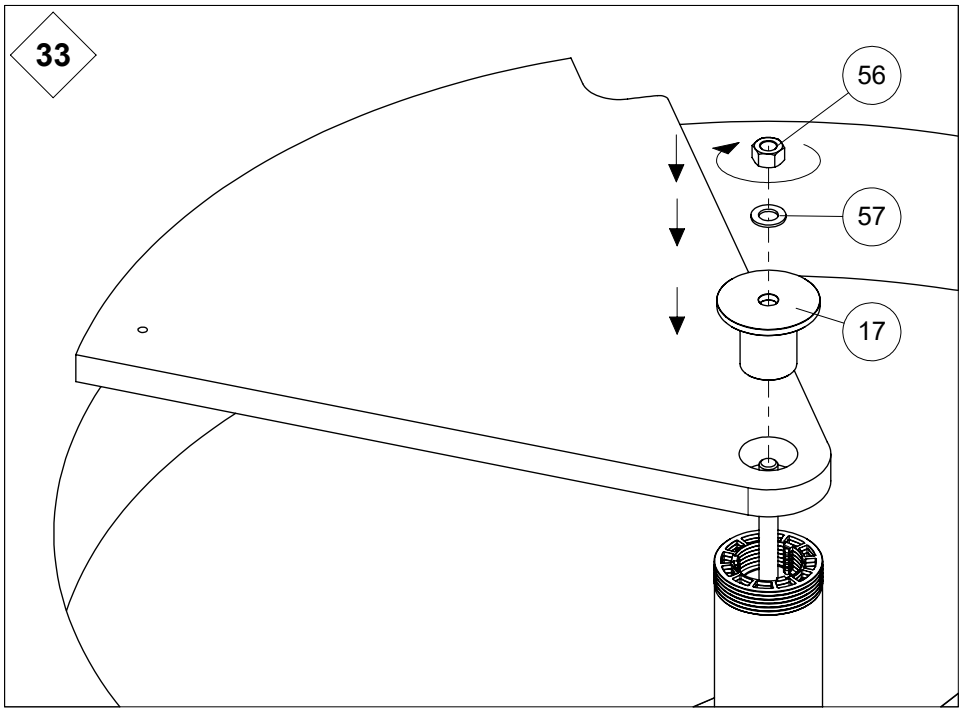
33
56
57
17

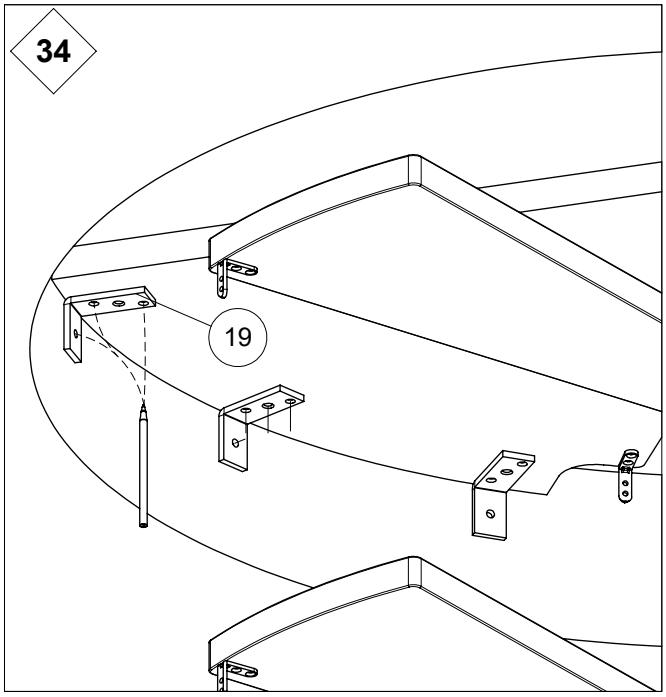
34
19

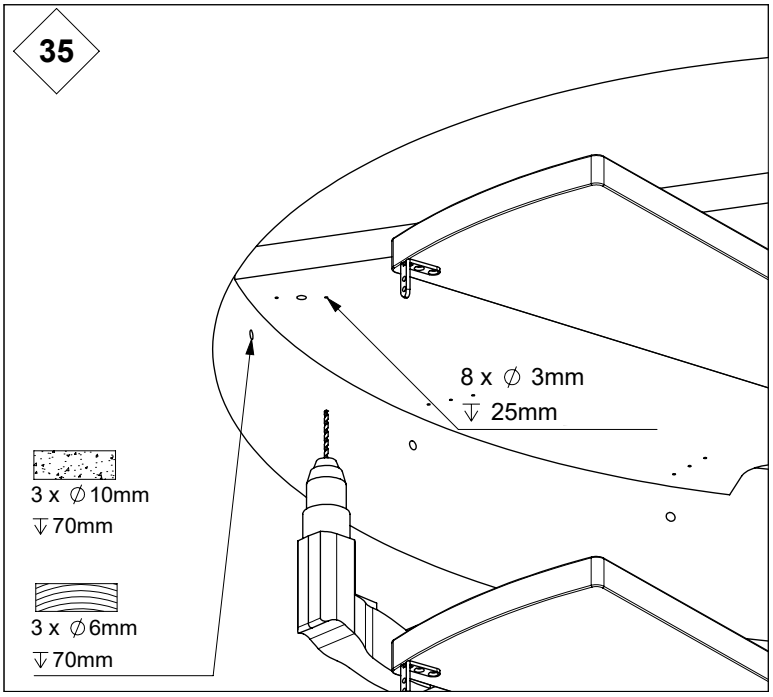
35
8 x ∅ 3mm
↓ 25mm
3 x ∅10mm
↓70mm
3 x ∅6mm
↓70mm

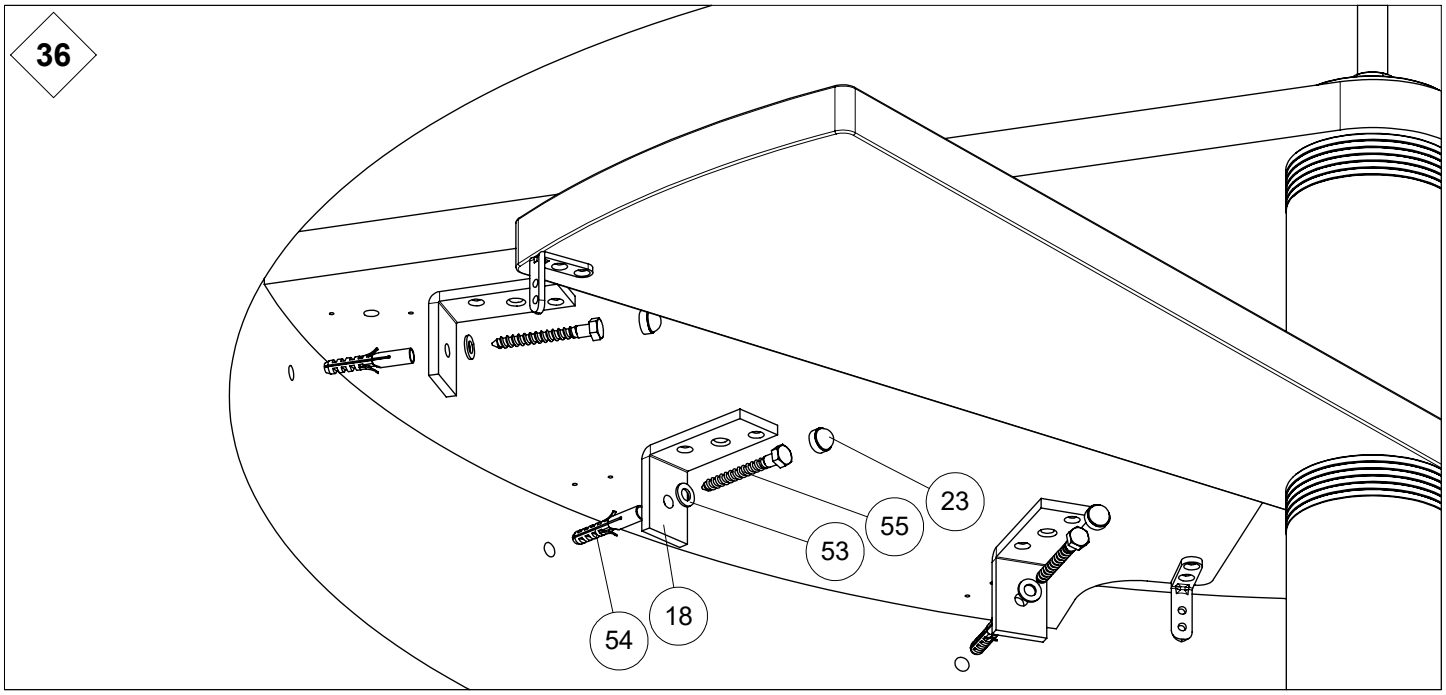
36
23
55
53
18
54

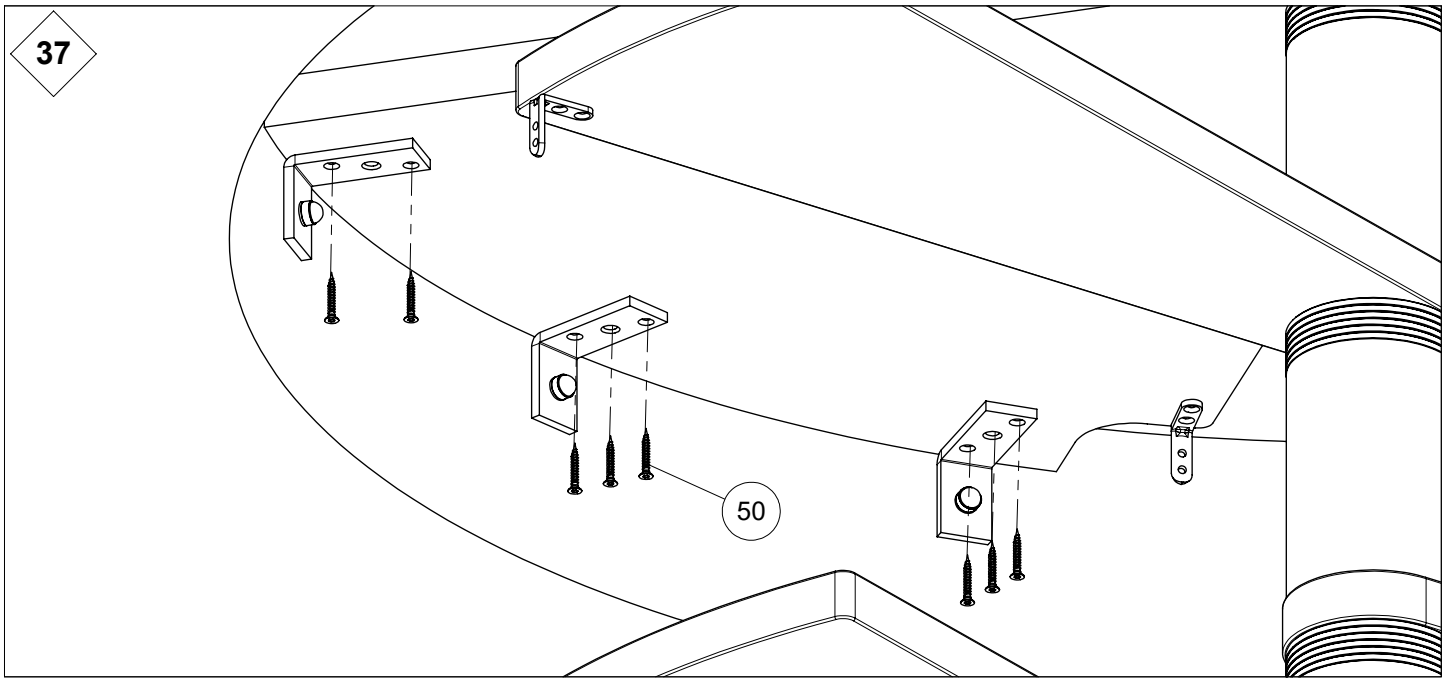
37
50

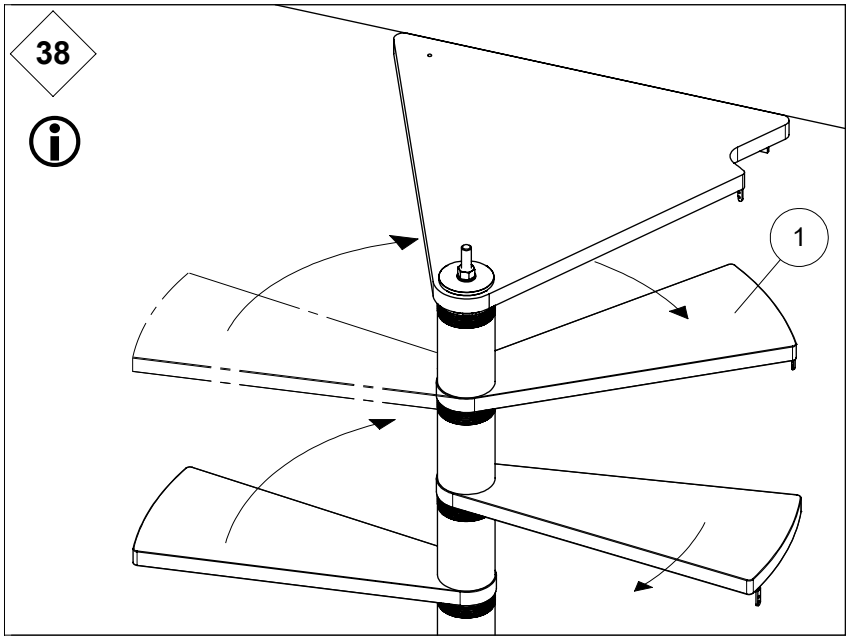
38
1

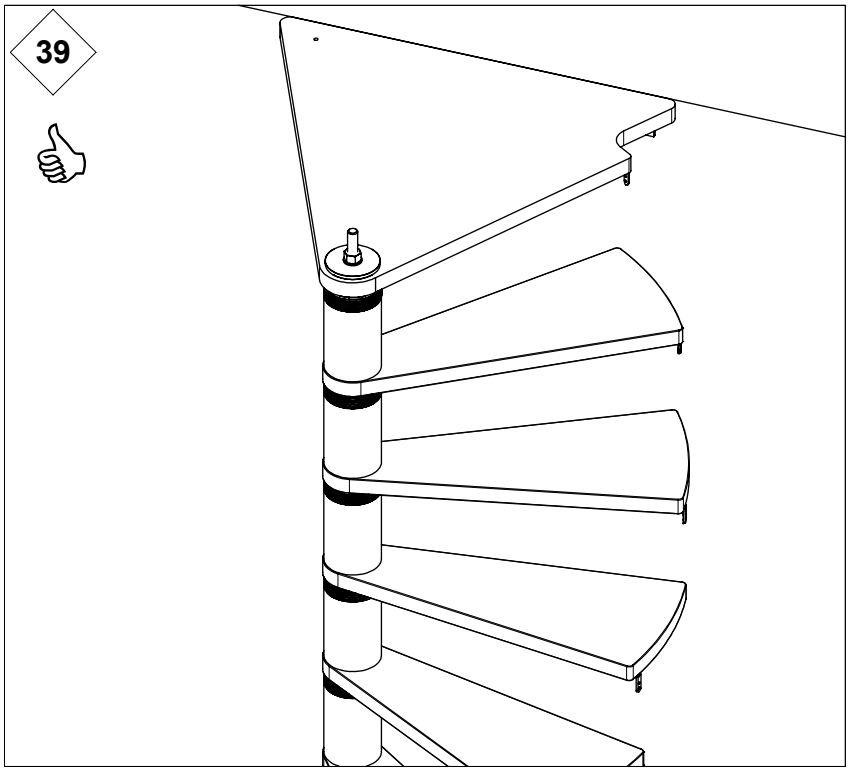
39

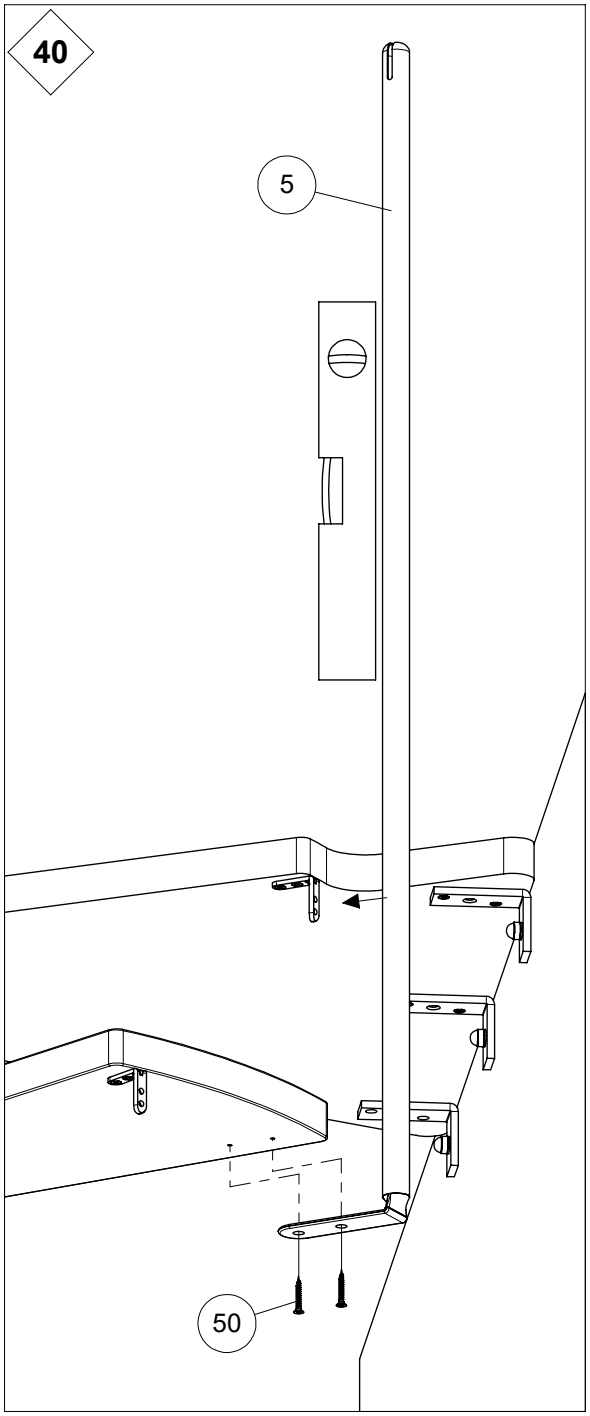
40
5
50

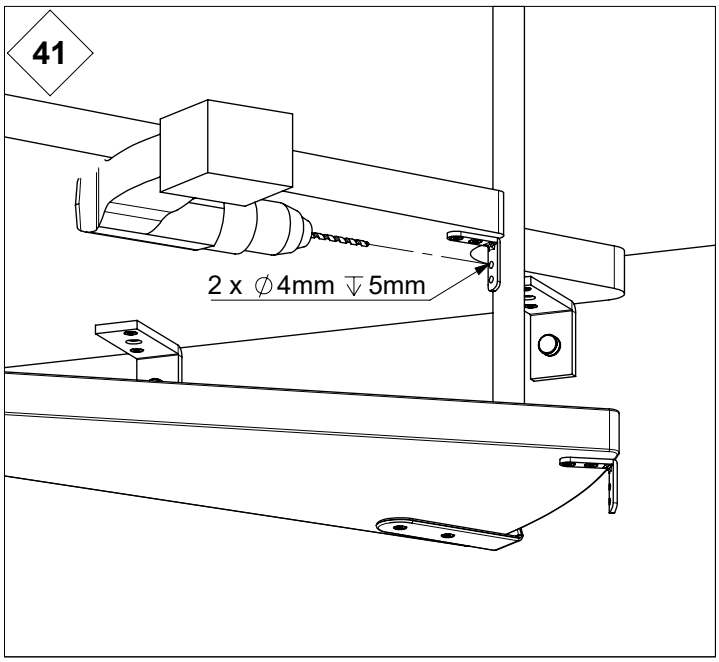
41
2 x ∅4mm ↓5mm

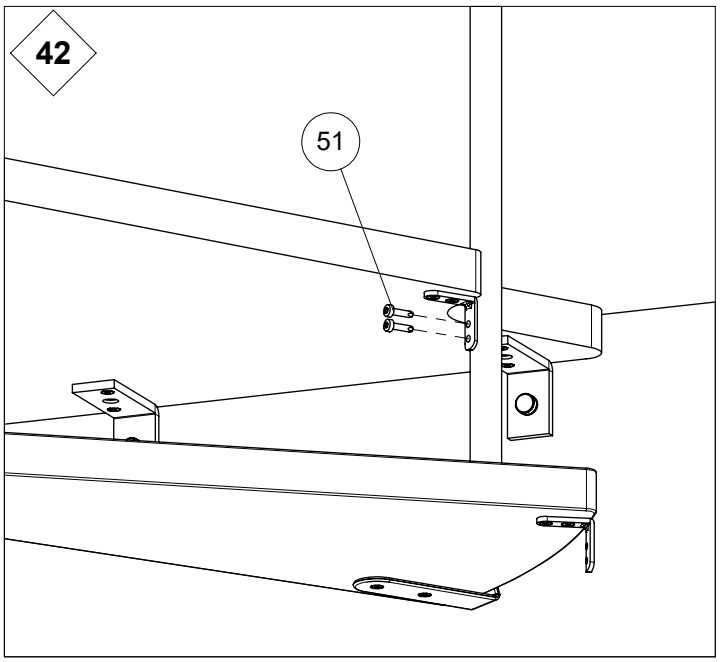
42
51

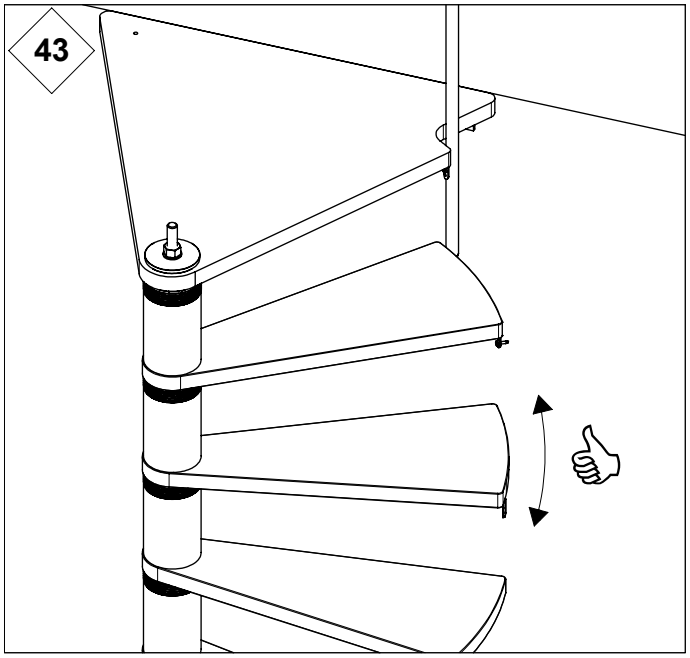
43

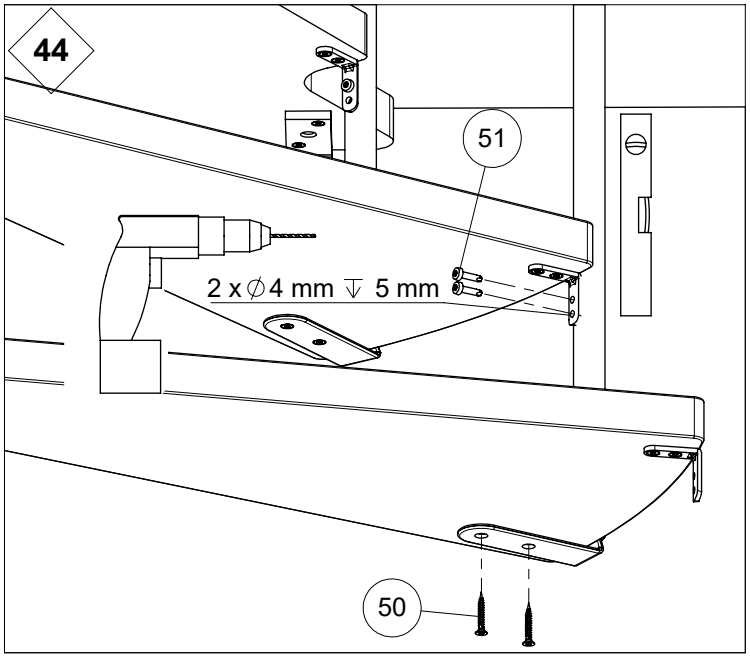
44
51
2 x ∅ 4 mm ↓ 5 mm
50

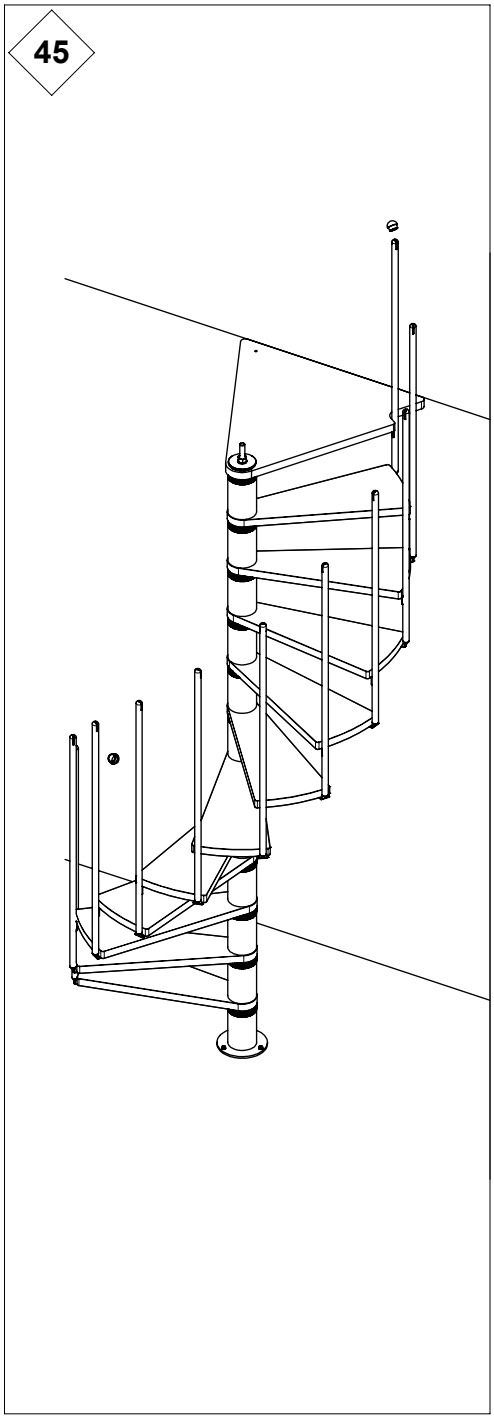
45

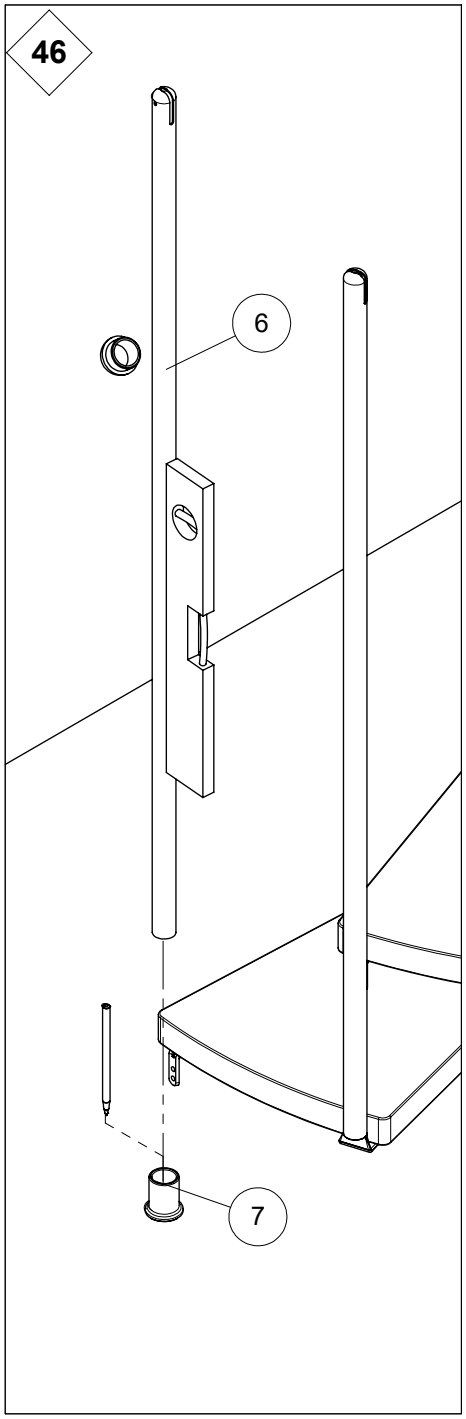
46
6
7

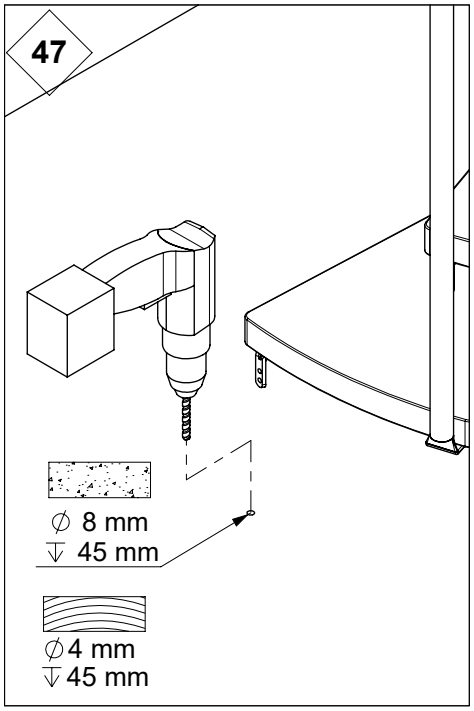
47
∅ 8 mm
↓ 45 mm
∅ 4 mm
↓ 45 mm

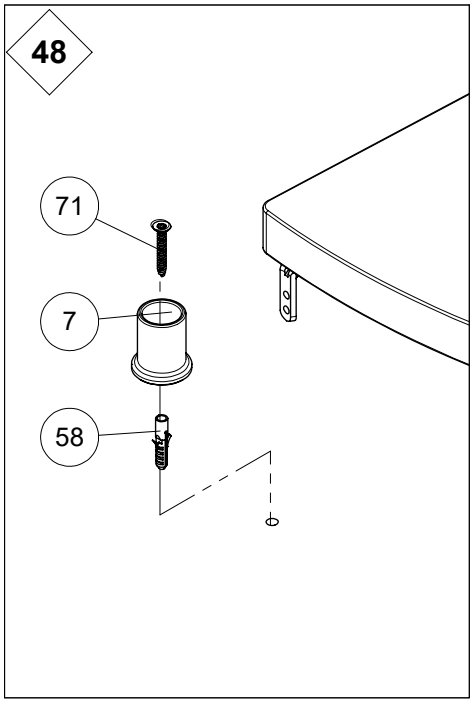
48
71
7
58

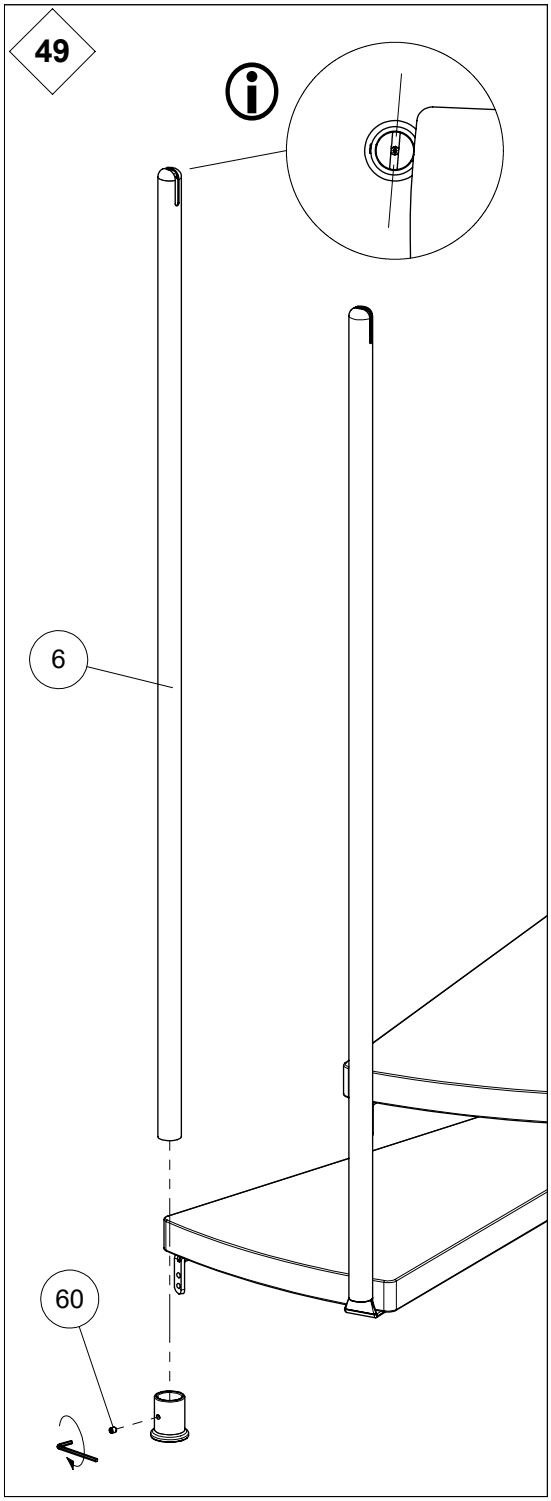
49
6
60

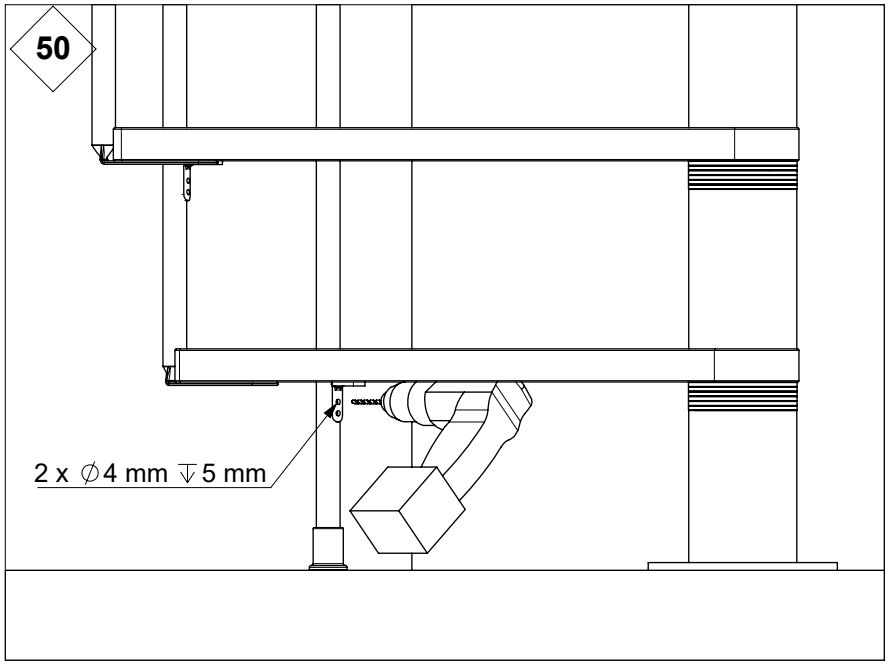
50
2 x ∅4 mm ↧5 mm

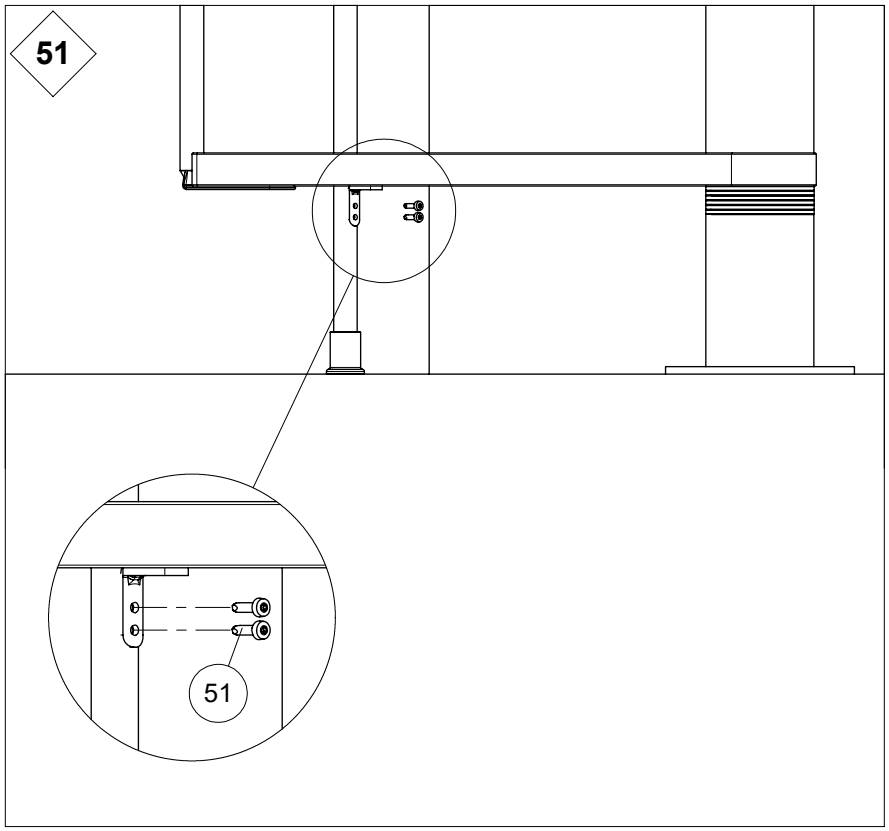
51
51

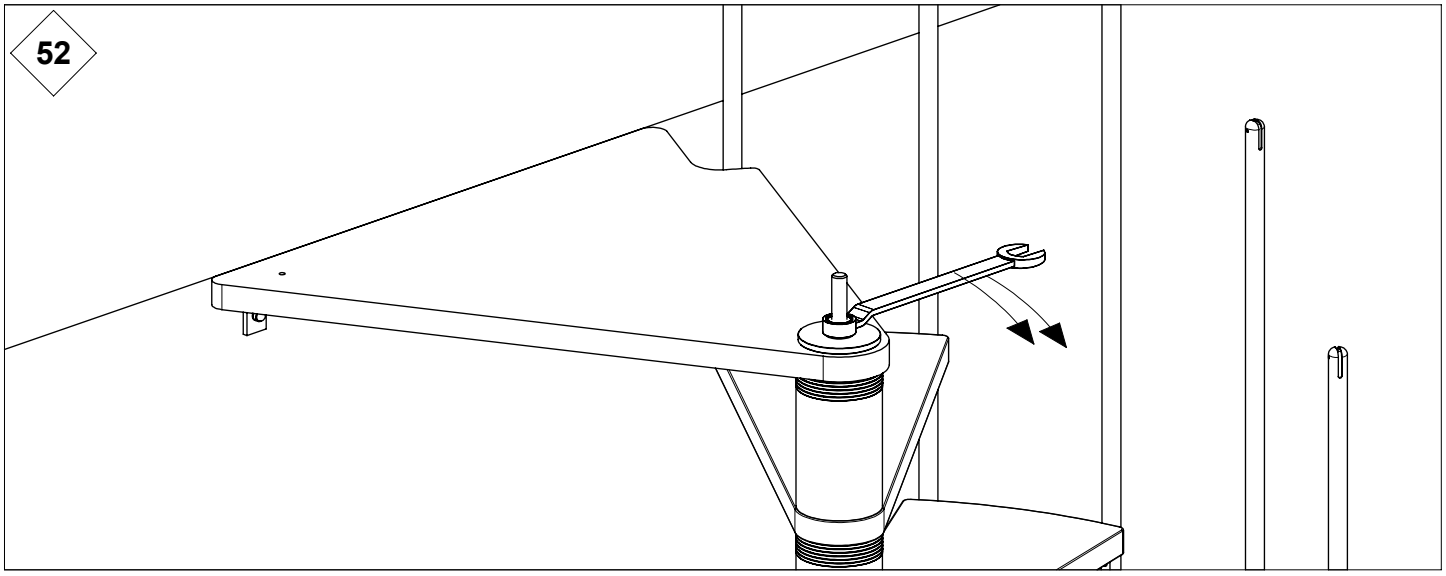
52

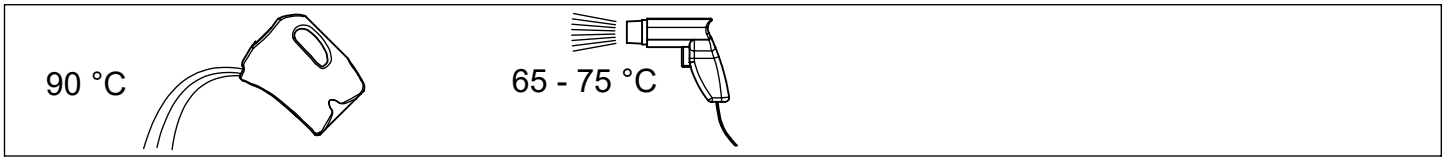
90 °C
65 - 75 °C

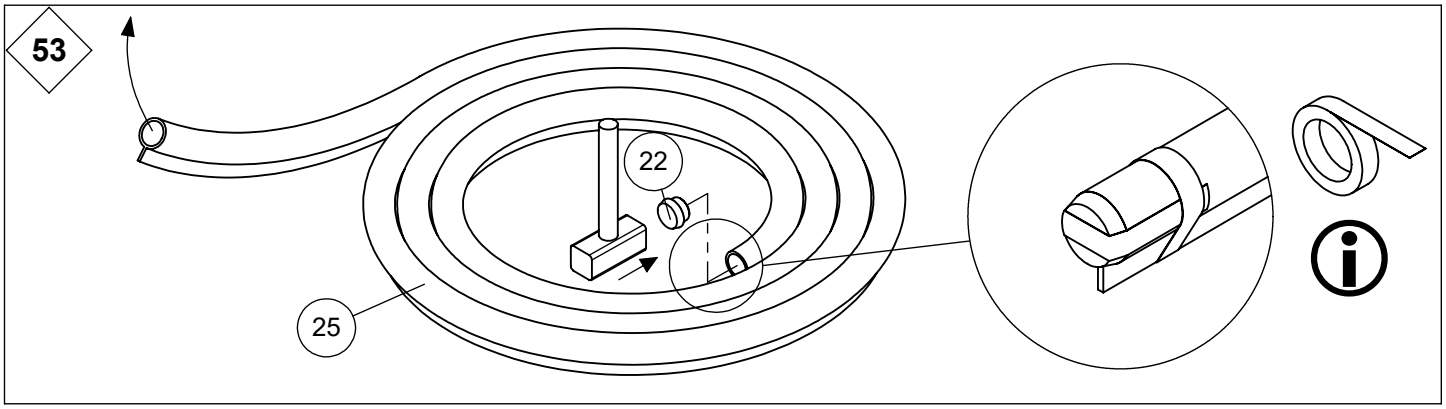
53
22
25

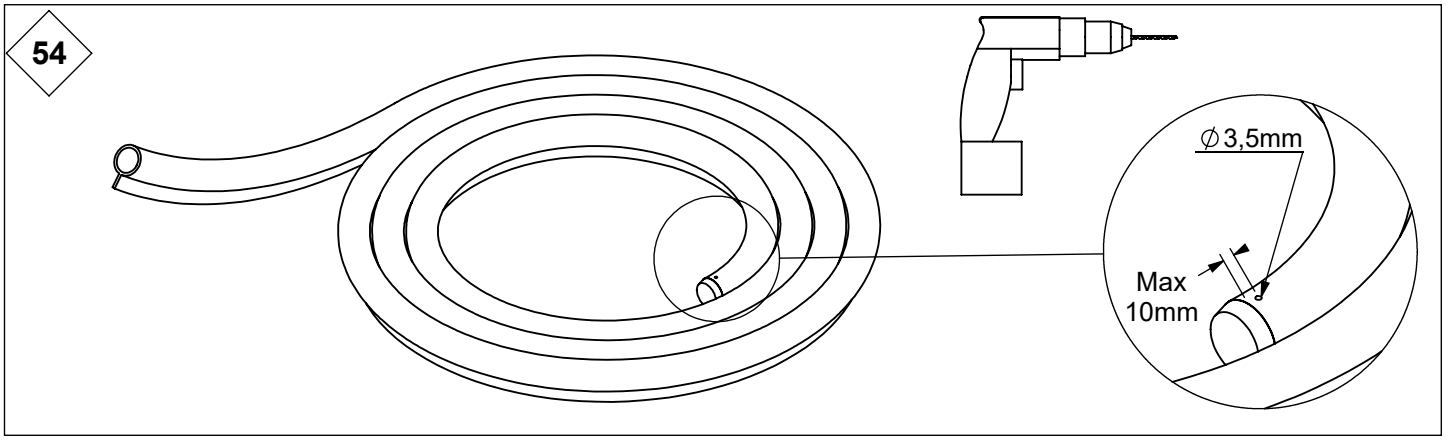
54
∅3,5mm
Max
10mm

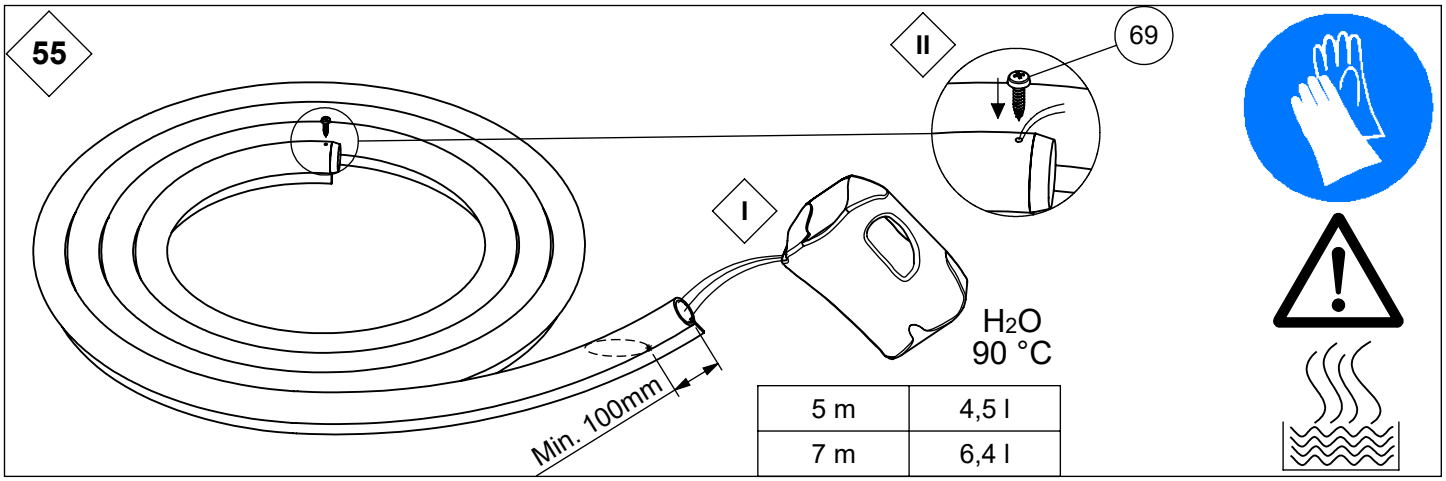
55
II
69
I
H2O
90 °C
Min. 100mm

| | |
|---|---|
| 5 m | 4,5 l |
| 7 m | 6,4 l |

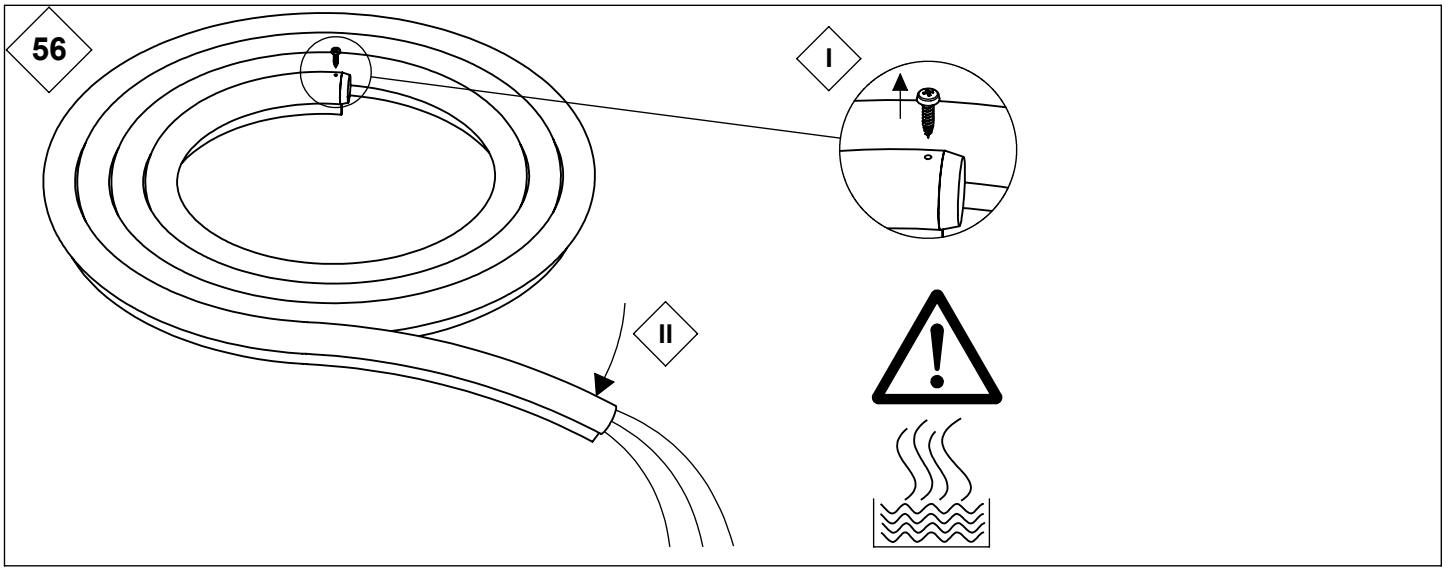
56
I
II

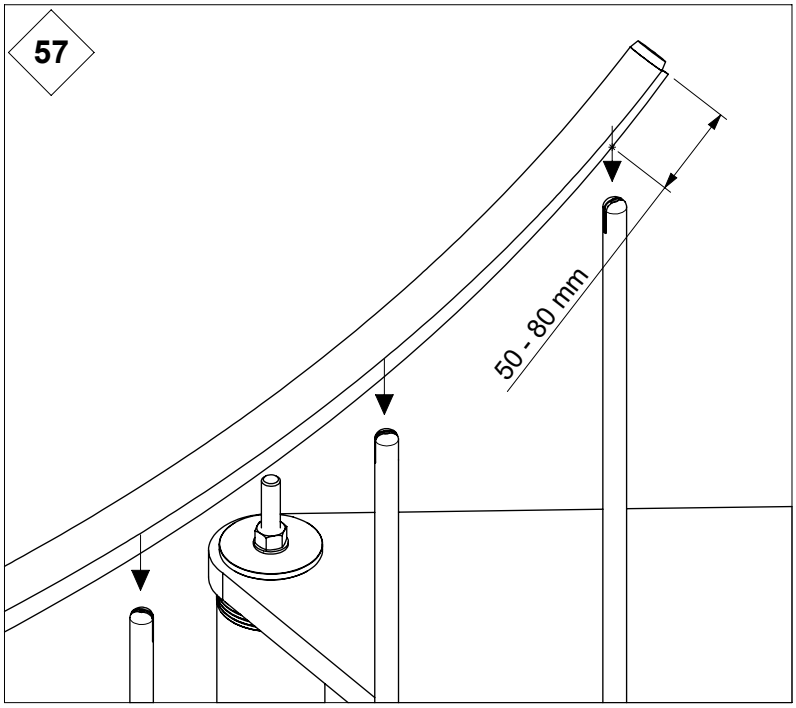
57
50 - 80 mm

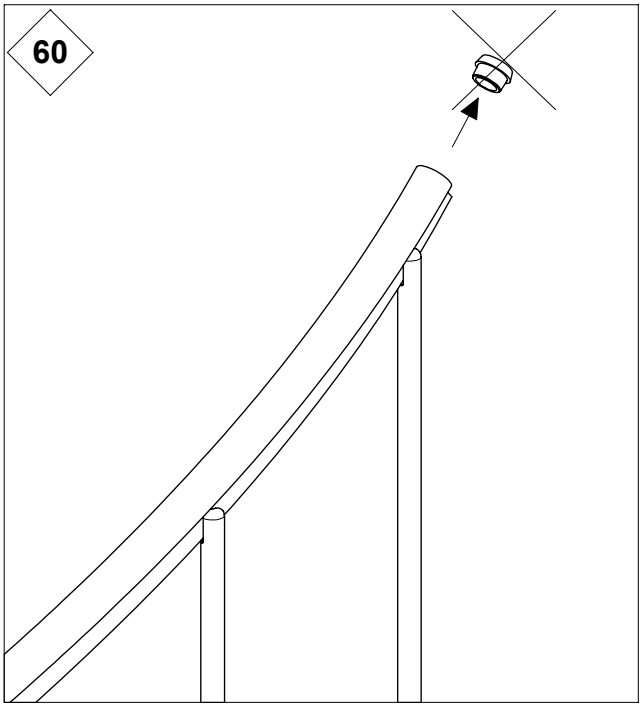
60

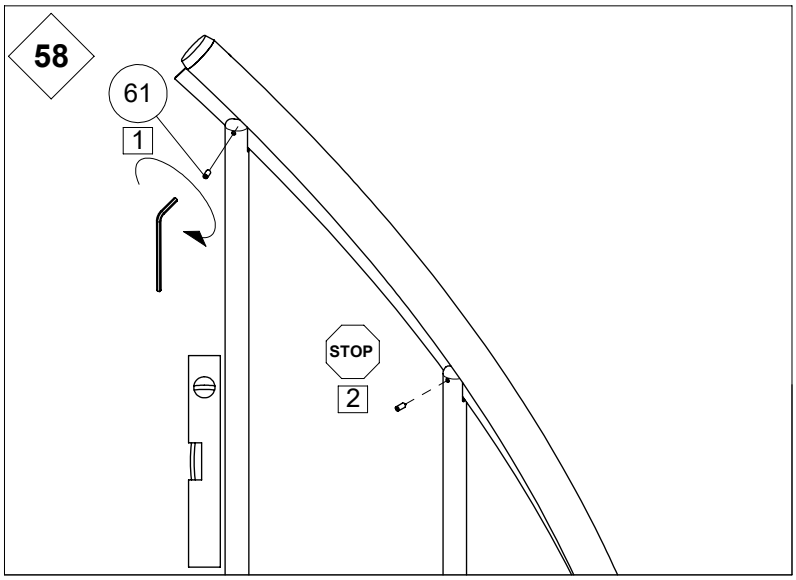
58
61
1
STOP
2

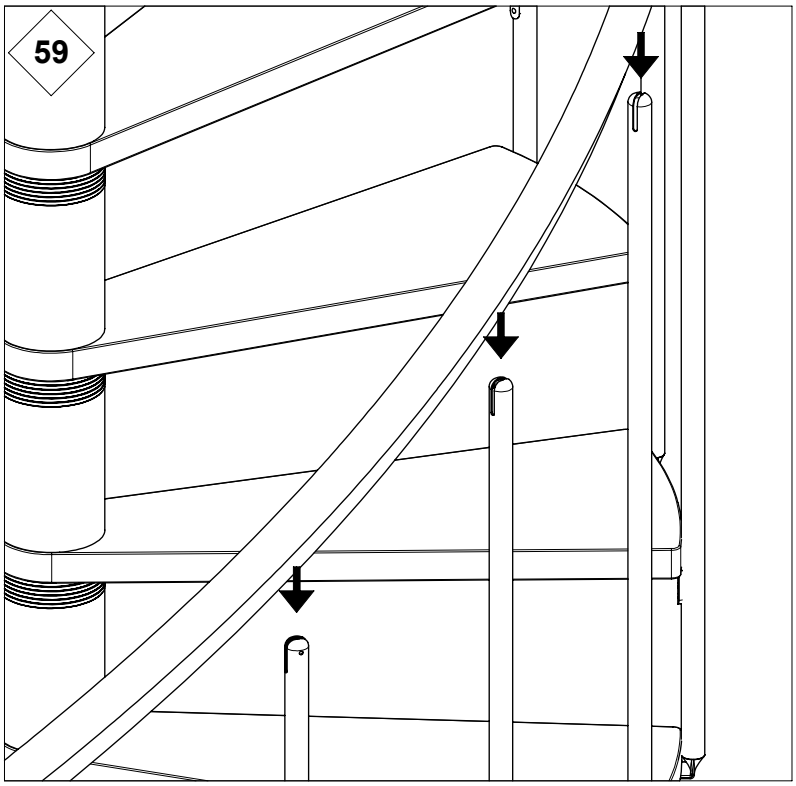
59

61

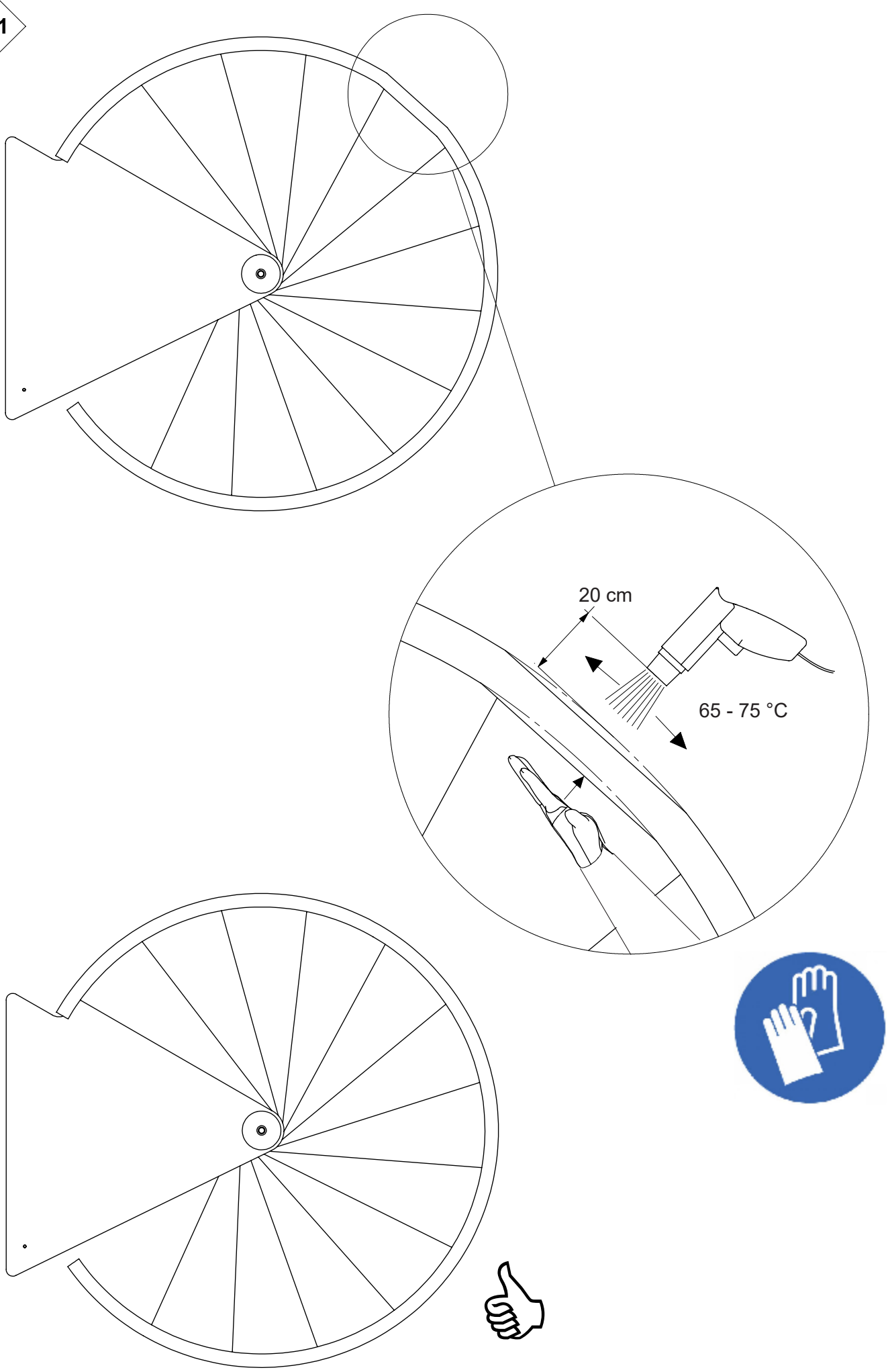

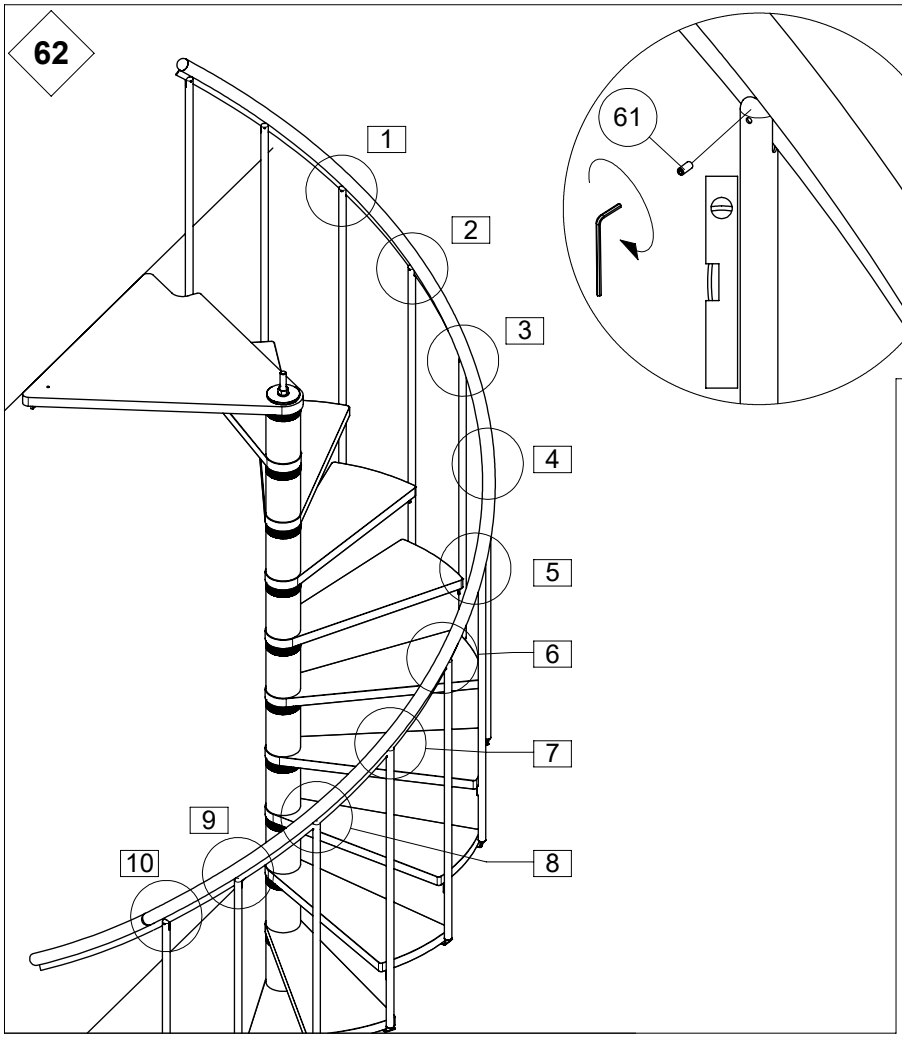
62
1
2
3
4
5
6
7
8
9
10
61

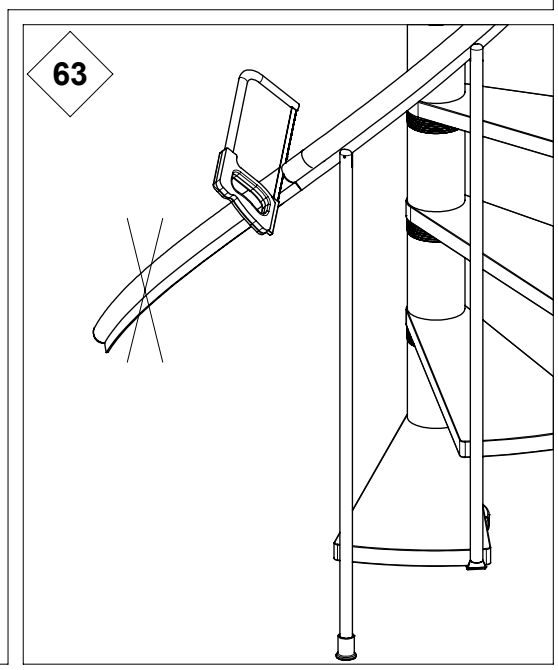
63

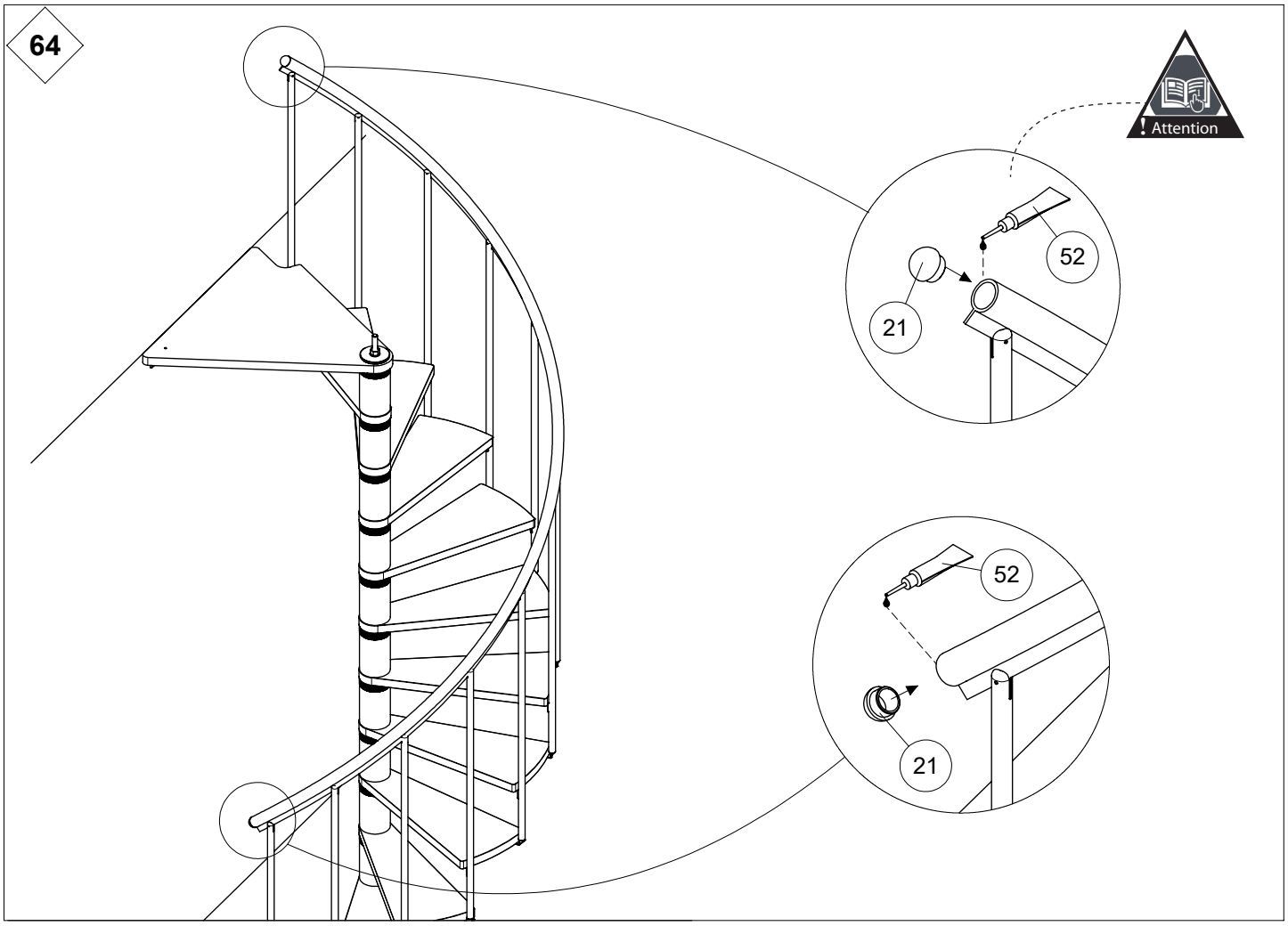
64
Attention
52
21
52
21

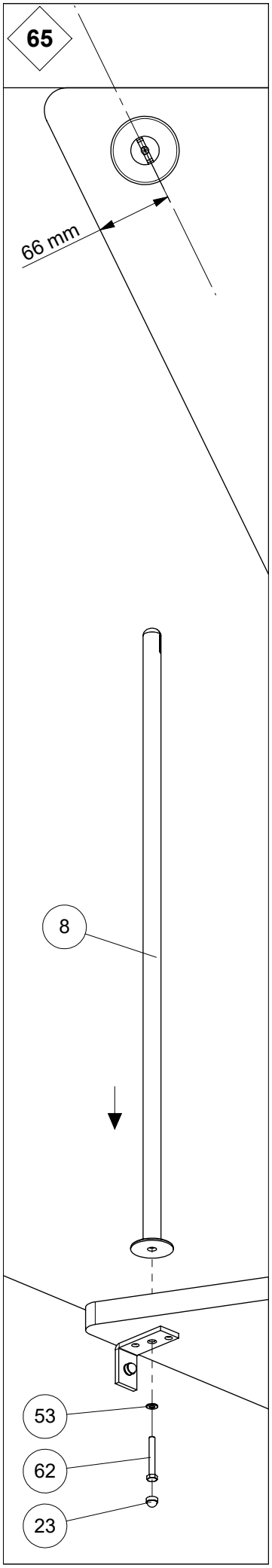
65
66 mm
8
53
62
23

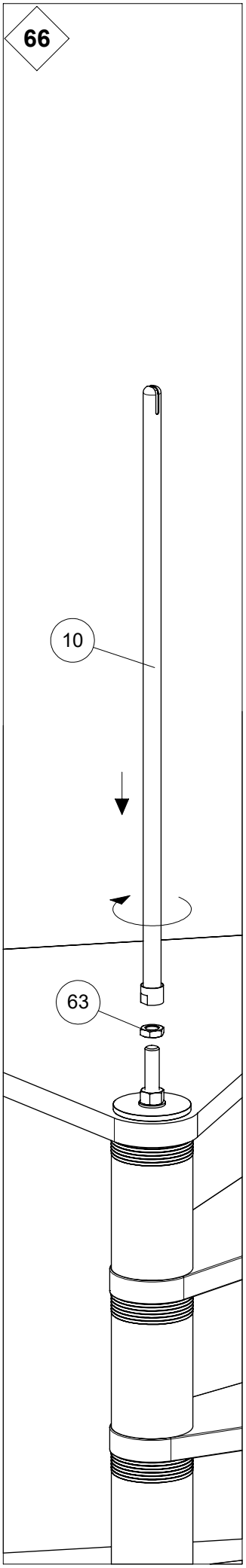
66
10
63

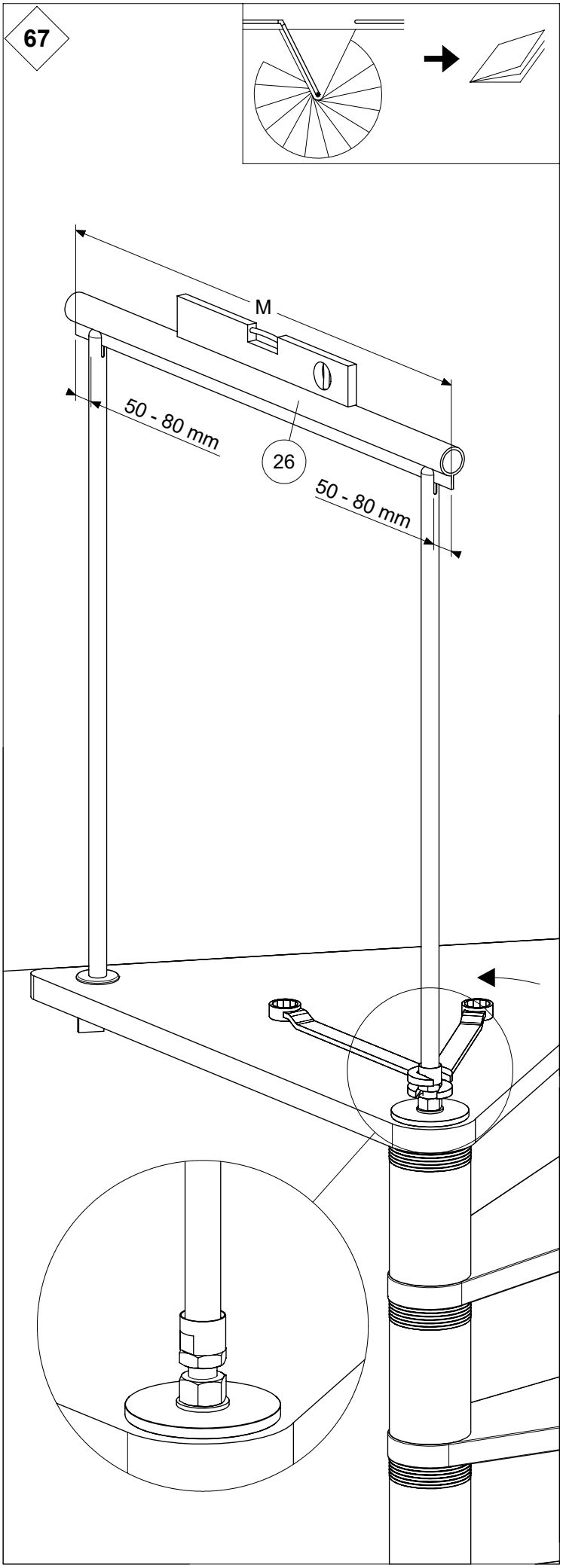
67
M
50 - 80 mm
26
50 - 80 mm

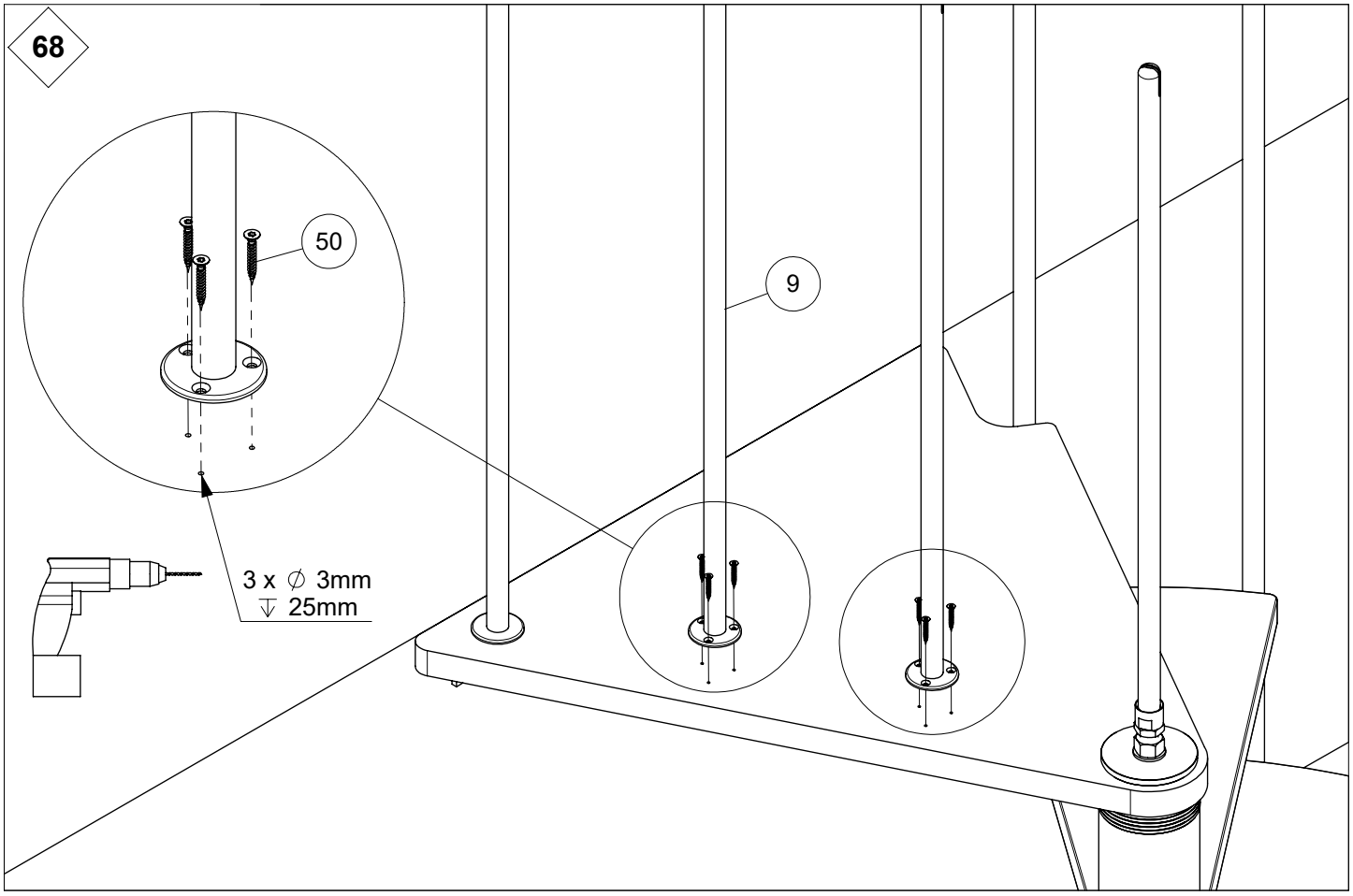
68
50
9
3 x ∅ 3mm
⊽ 25mm

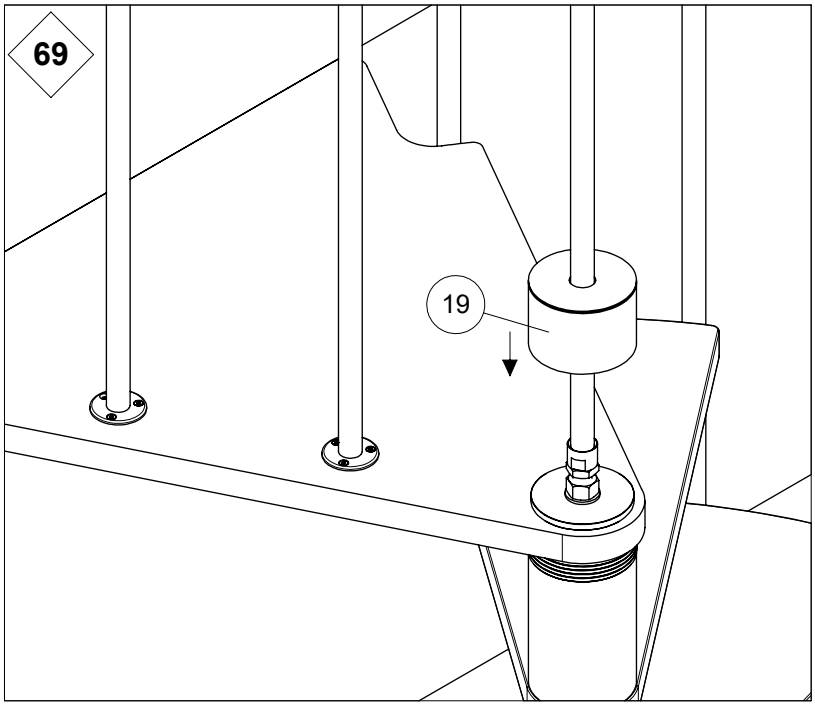
69
19

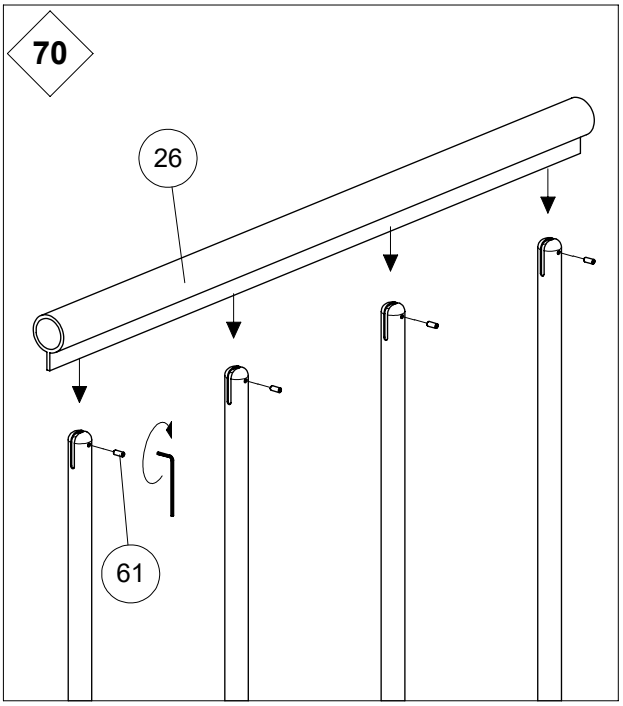
70
26
61

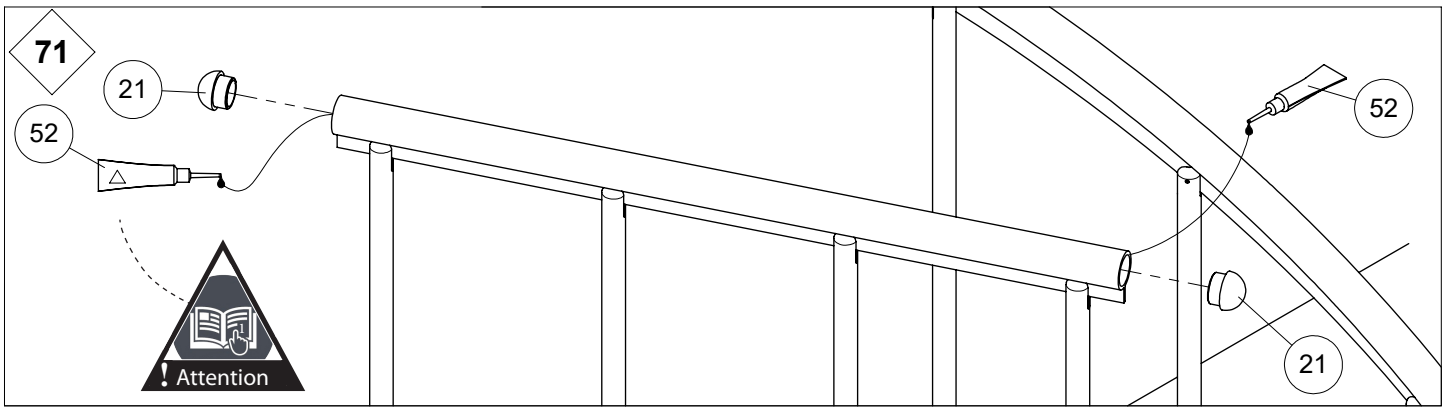
71
21
52
52
21
Attention

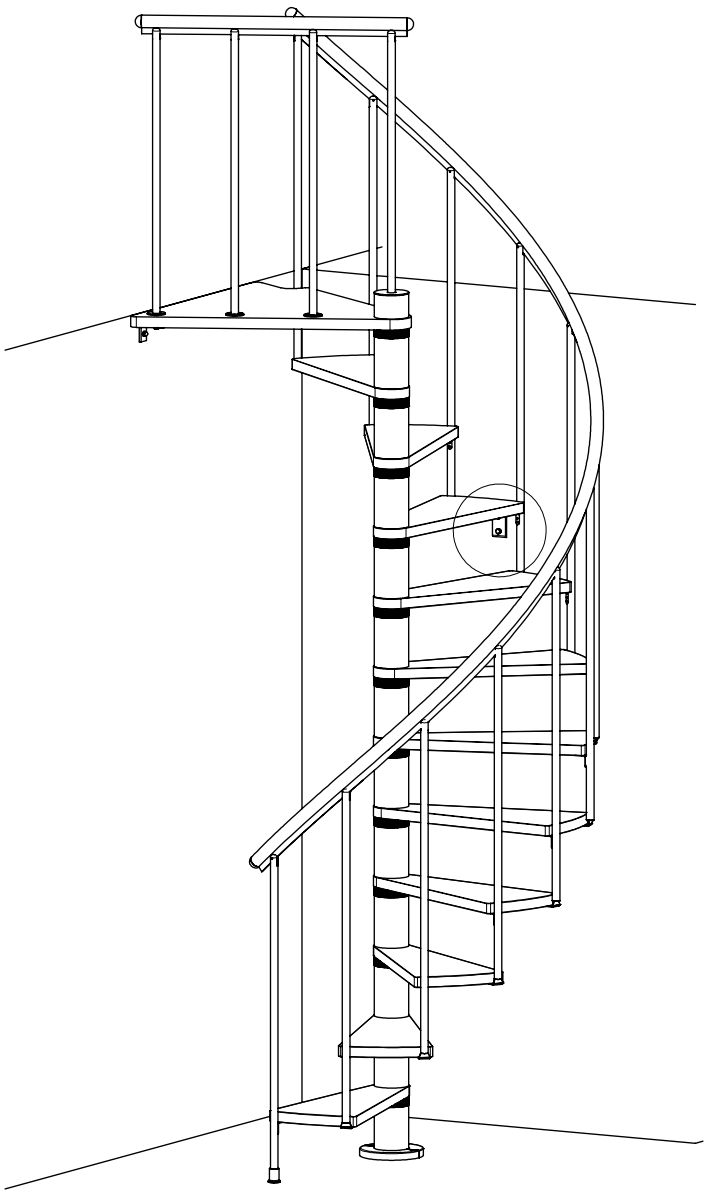

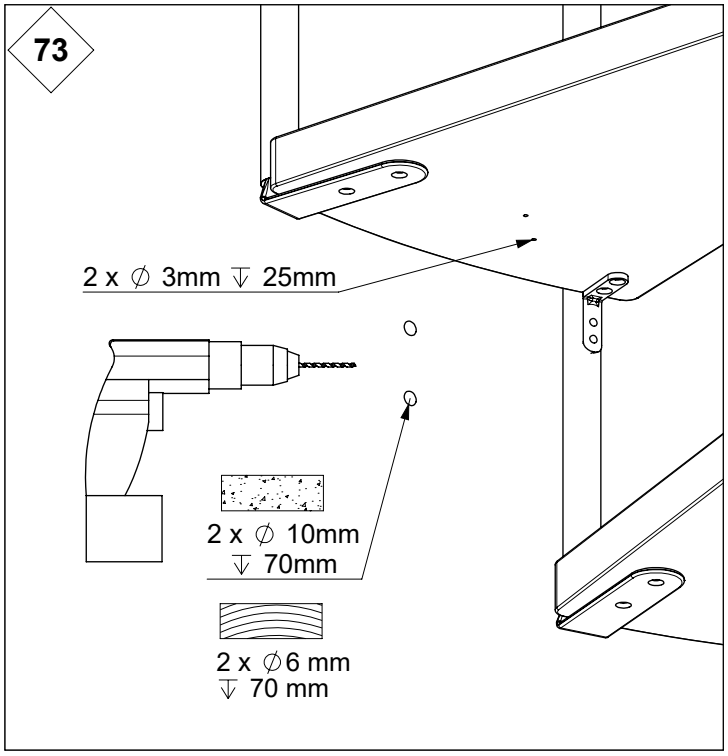
73
2 x ∅ 3mm ↧ 25mm
2 x ∅ 10mm
↧ 70mm
2 x ∅6 mm
↧ 70 mm

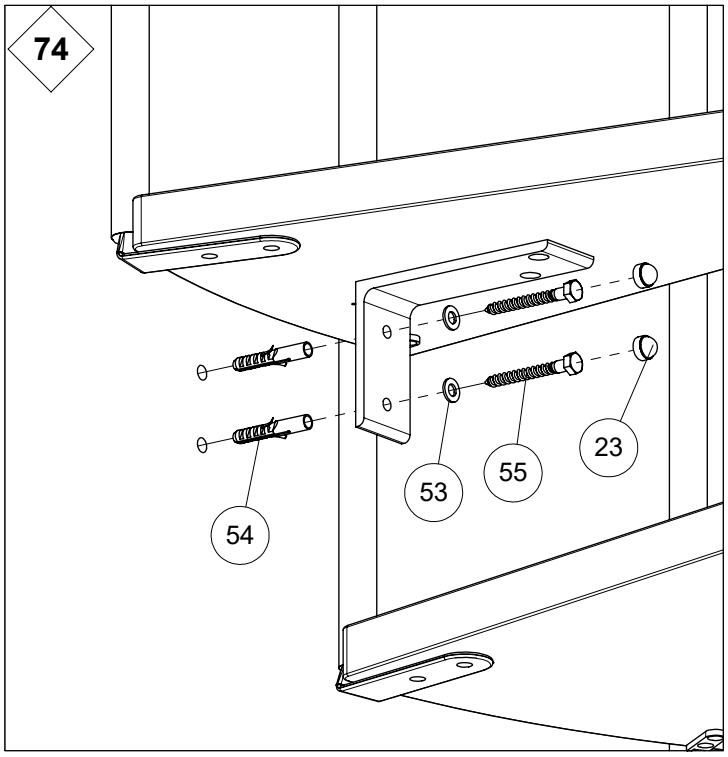
74
23
55
53
54

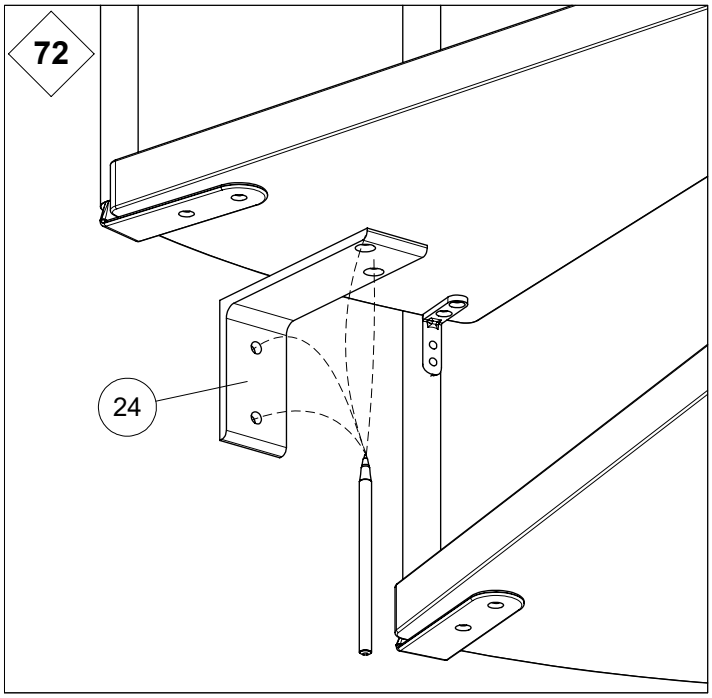
72
24

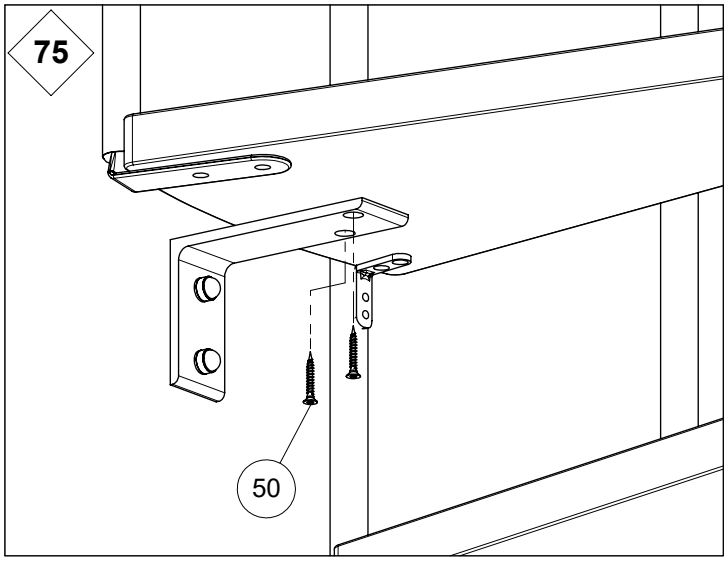
75
50

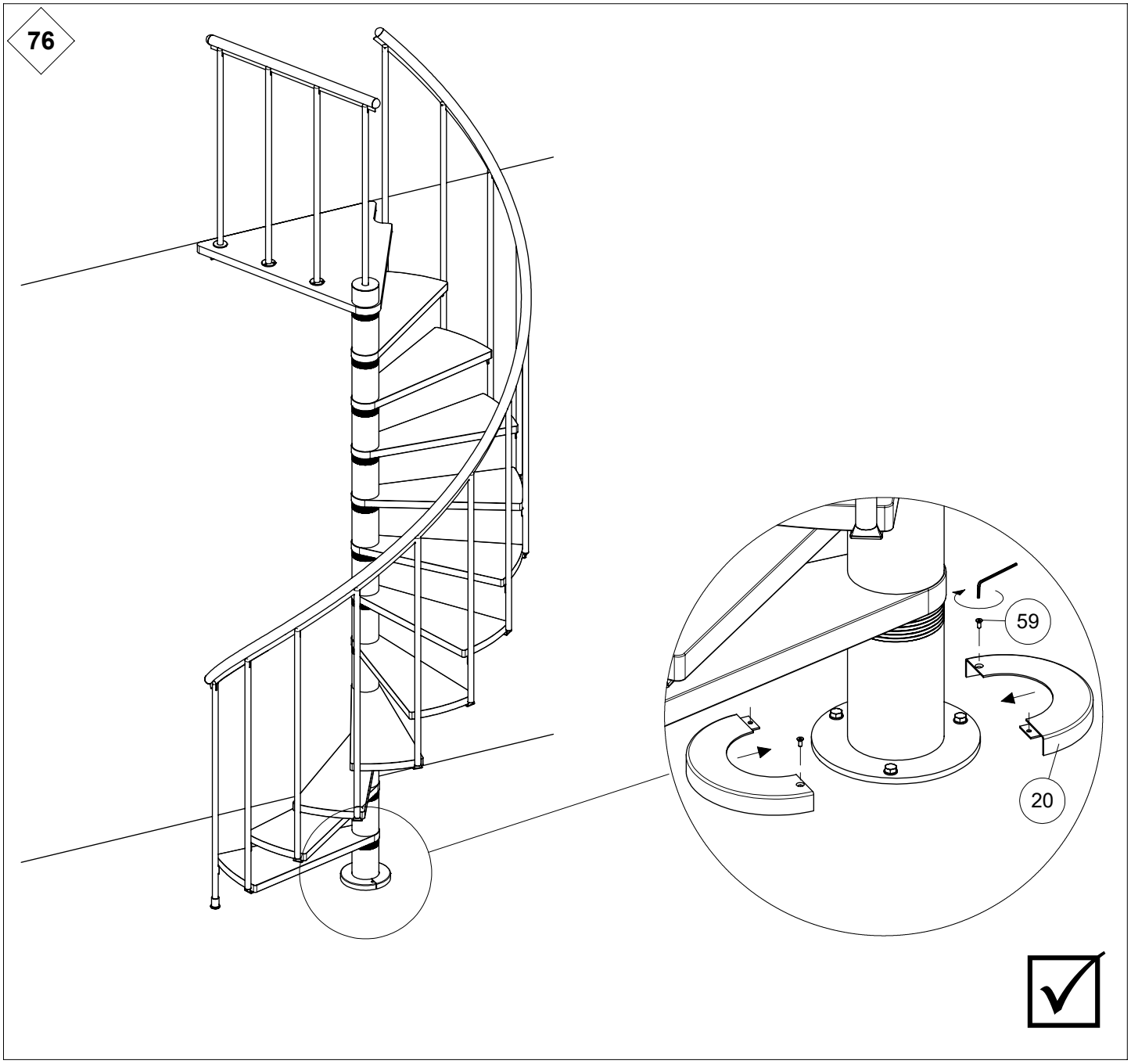
76
59
20