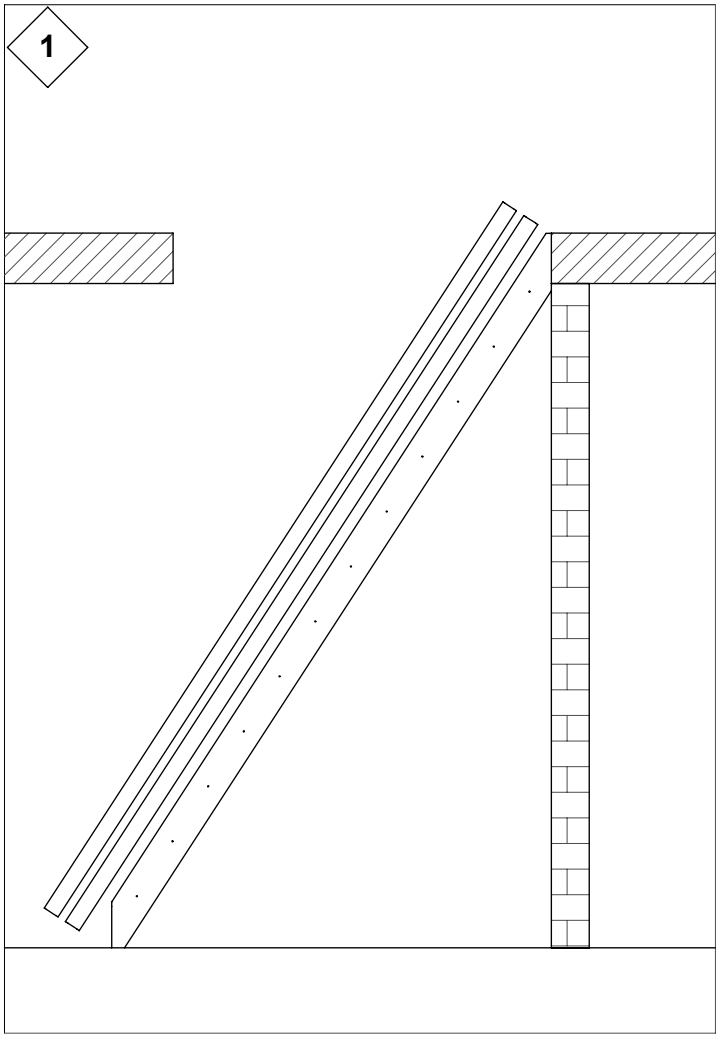
1

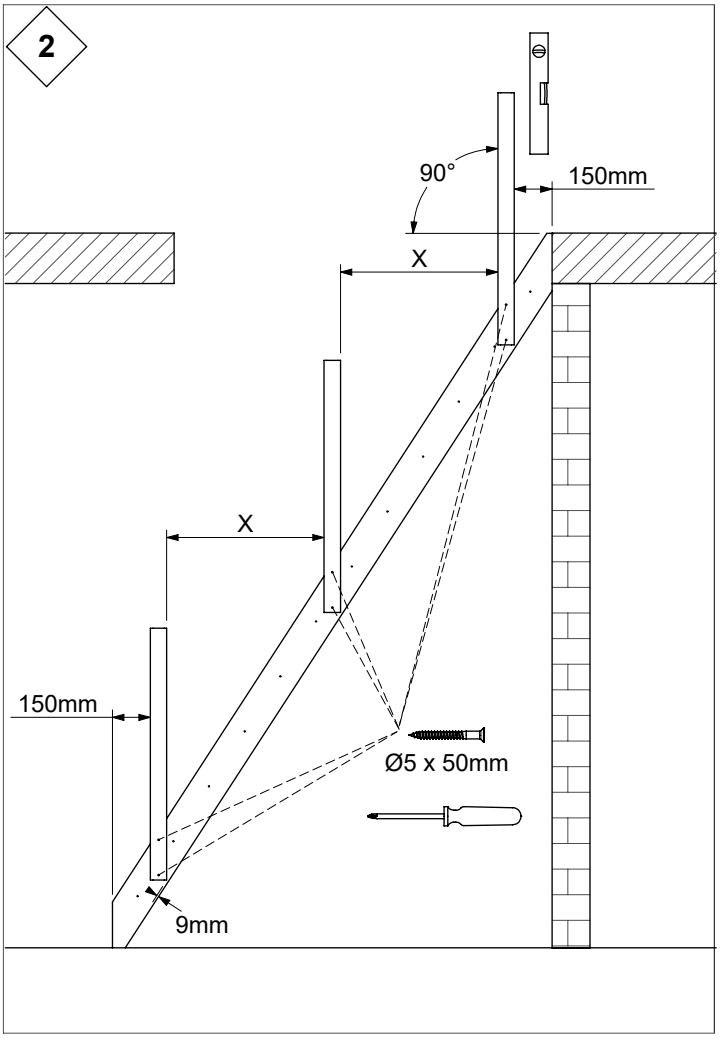
2
90°
150mm
X
X
150mm
Ø5 x 50mm
9mm

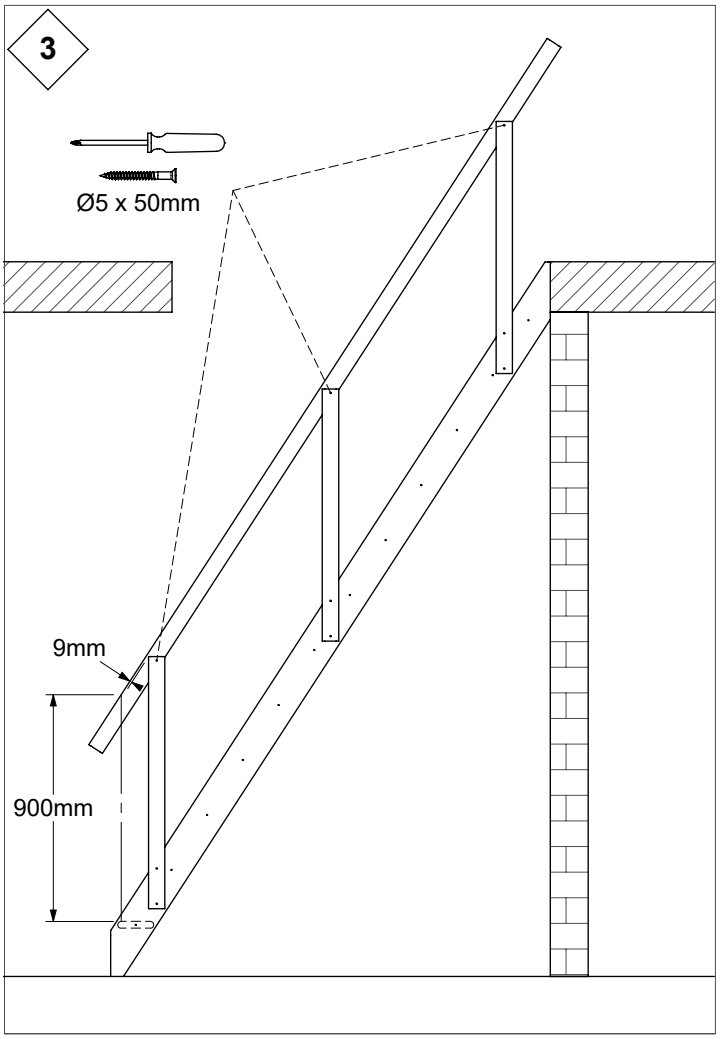
3
Ø5 x 50mm
9mm
900mm

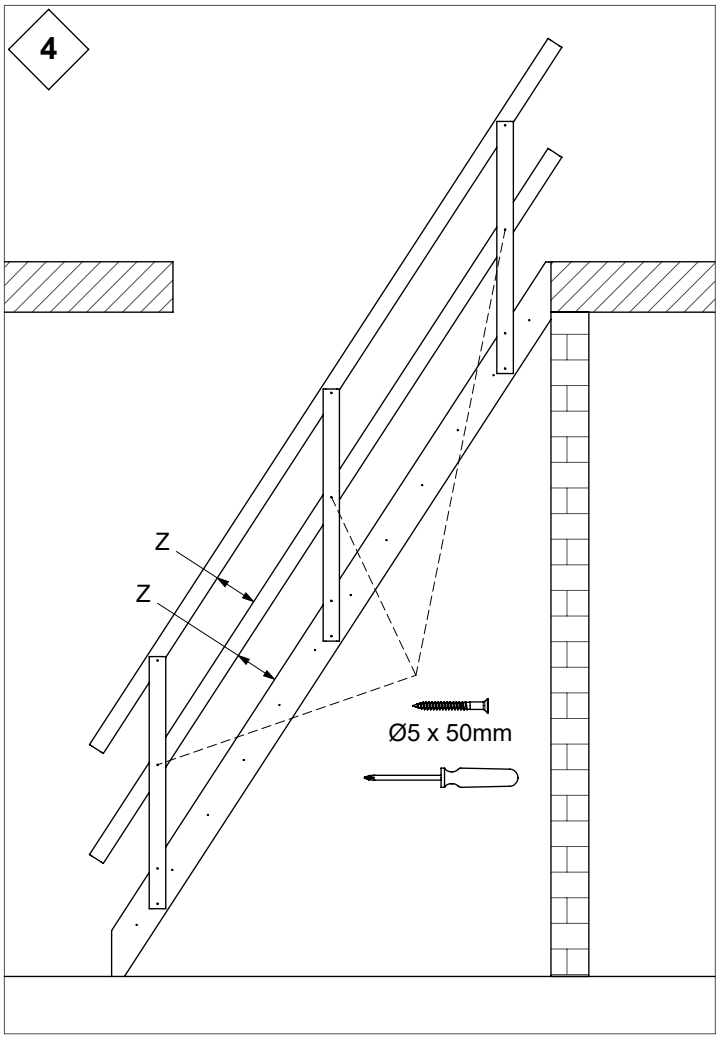
4
Z
Z
Ø5 x 50mm