8a × 1	8b × 1	9a × 1	9b × 1	
		10 × 2		
14 × 2			15 × 2	16 × 4
20 × 1	21 × 1	22 × 2	23 × 1 *Ø4 x 20*	25 × 2	29 × 1
30 × 1				
31 × 2	32 × 1	39 × 1	41 × 4 *M5 x 20* PZ 2	42 × 8 *M6 x 20* PZ 3	43 × 6 *M6 x 30* PZ 3
44 × 2 *M6 x 24* PZ 3	45 × 6 *M6 x 16* PZ 3	46 × 6 *Ø7 / Ø30*	47 × 1 *Ø4 x 40* PZ 2	50 × 4 *M6 x 25* PZ 3	51 × 2 *Ø6 x 80 PH* PZ 3

▶ 7

1

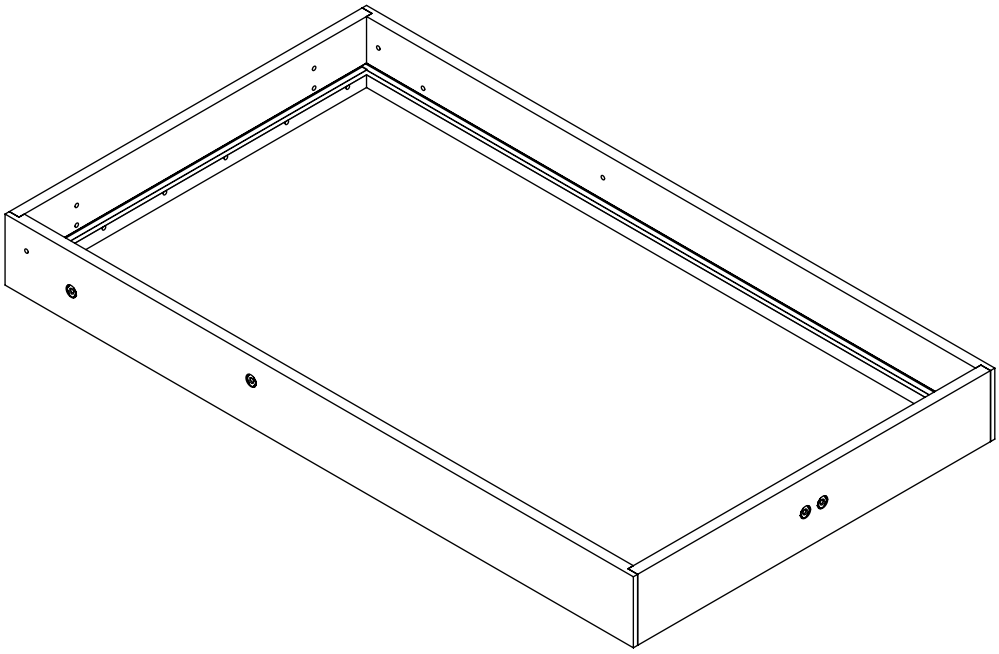

2

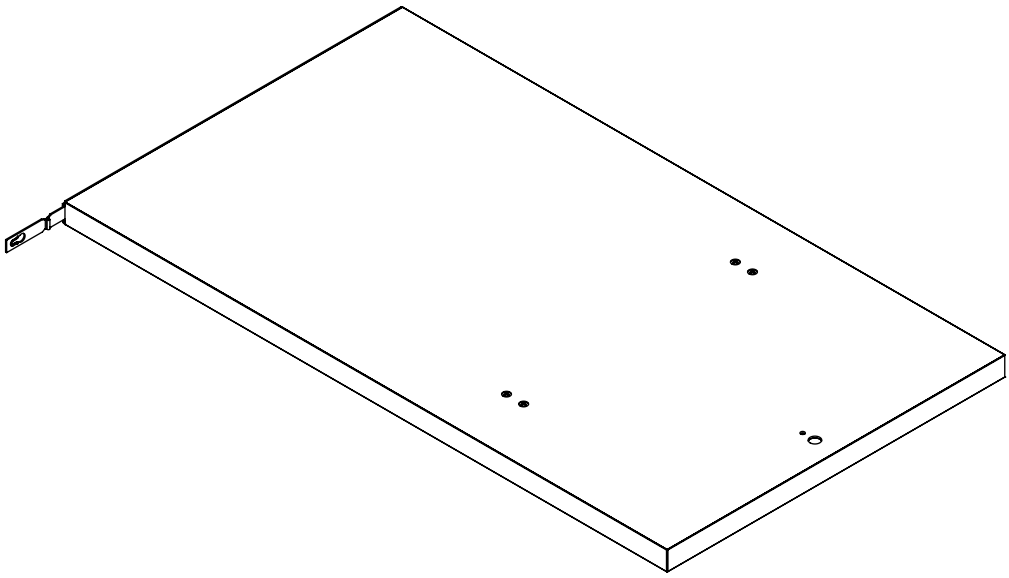

3

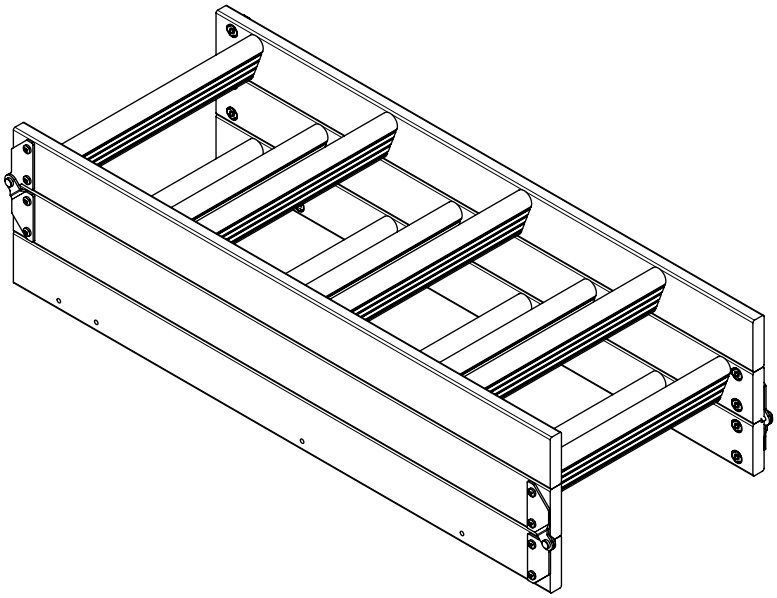

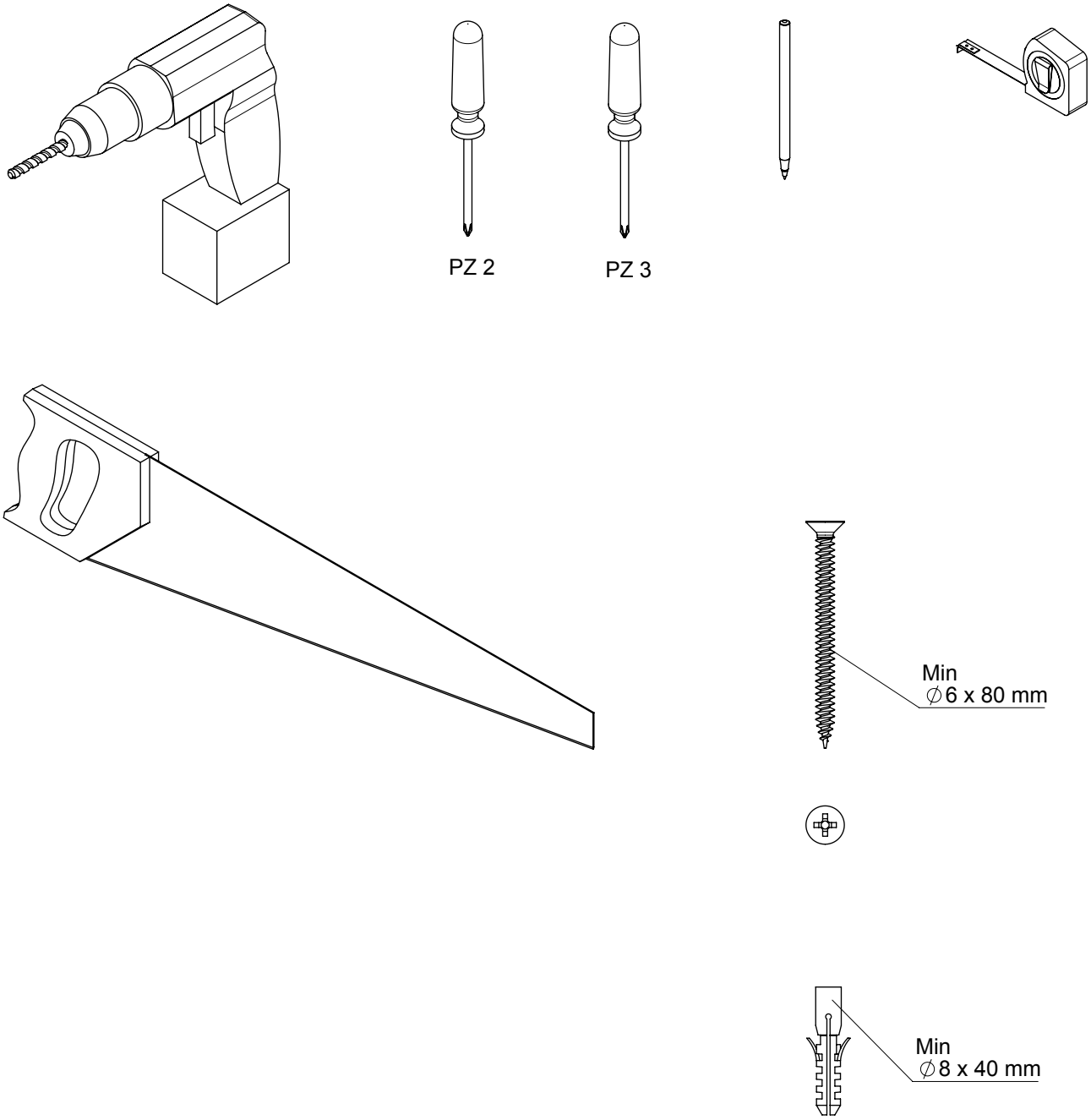
PZ 2
PZ 3
Min
∅6 x 80 mm
Min
∅8 x 40 mm

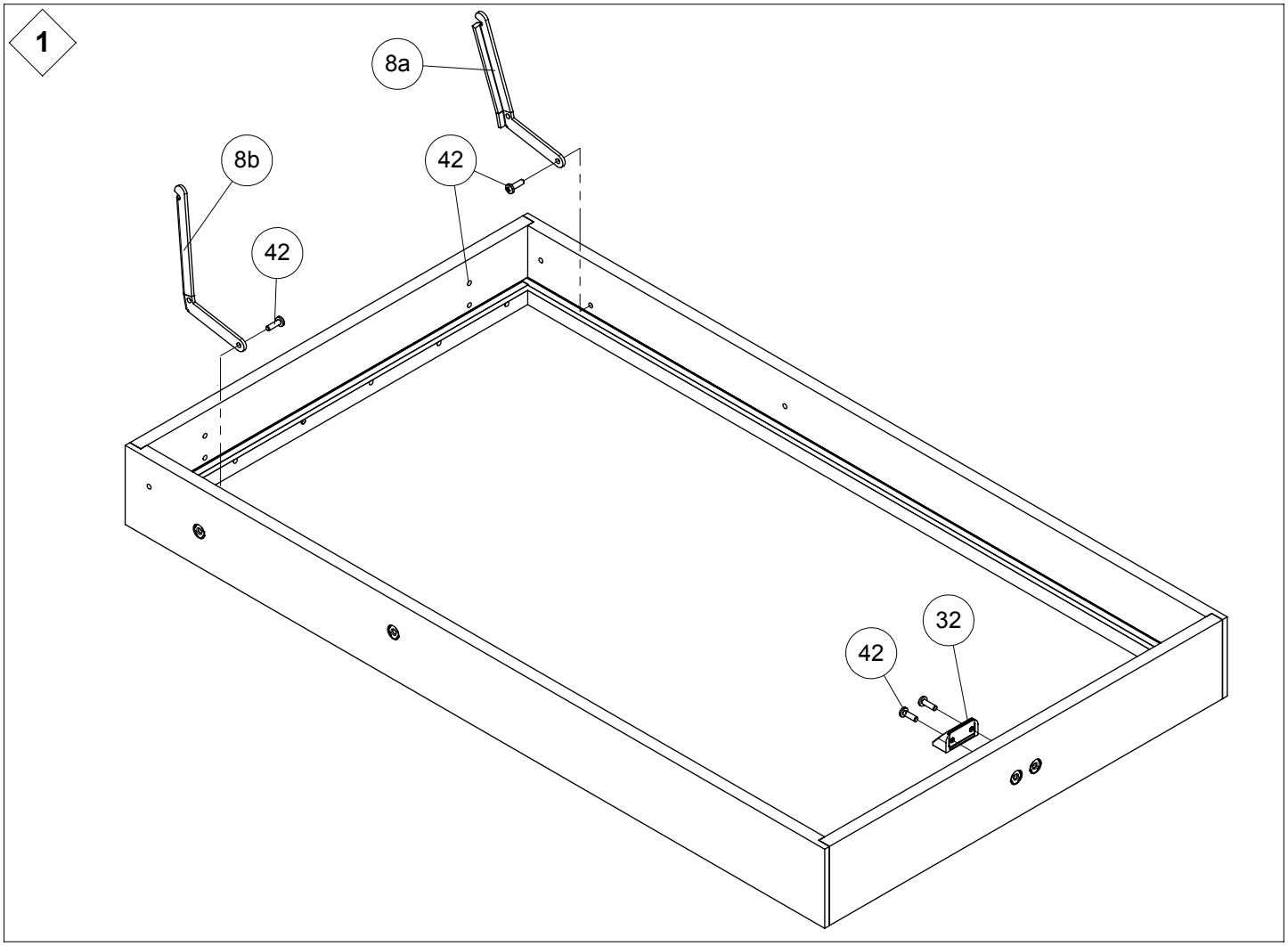
1
8a
8b
42
42
42
32

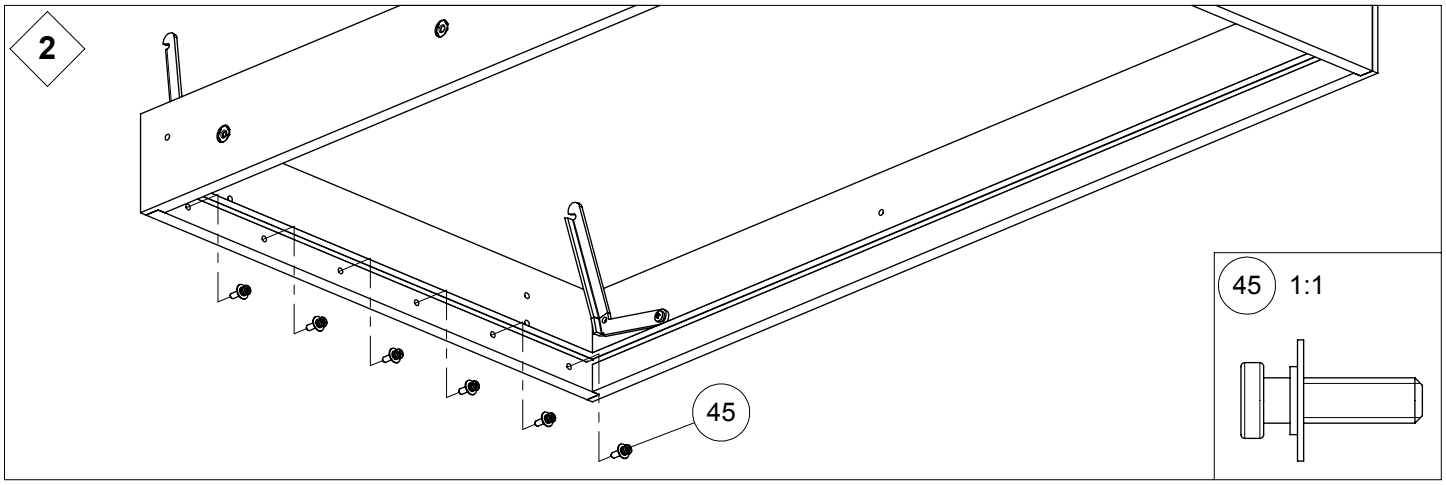
2
45
45
1:1

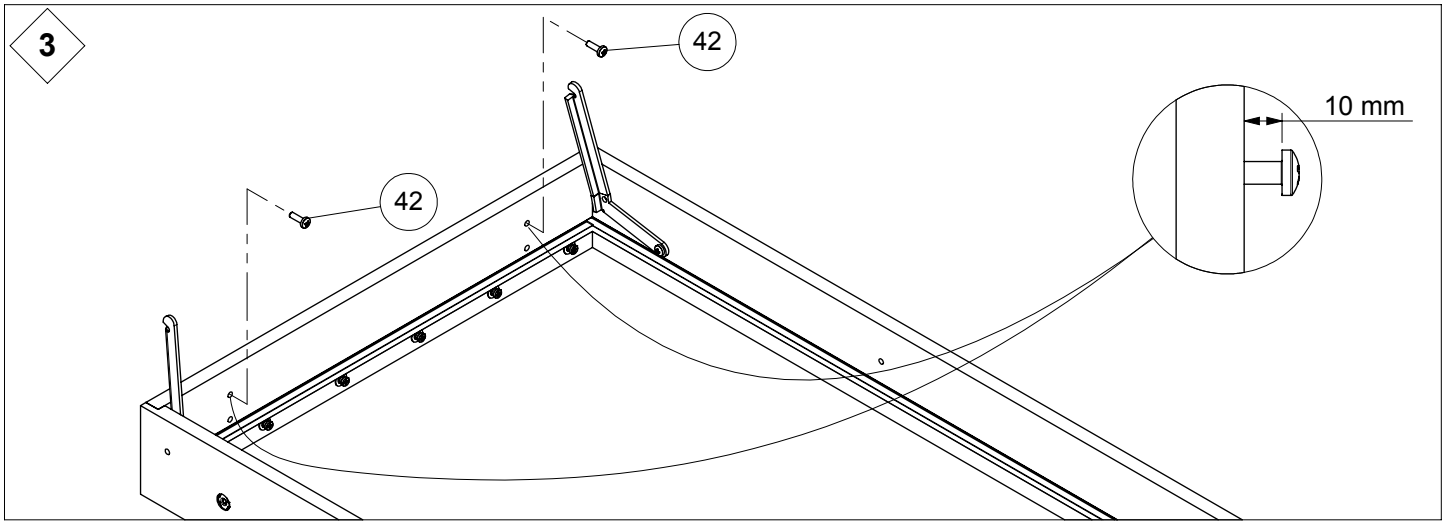
3
42
42
10 mm

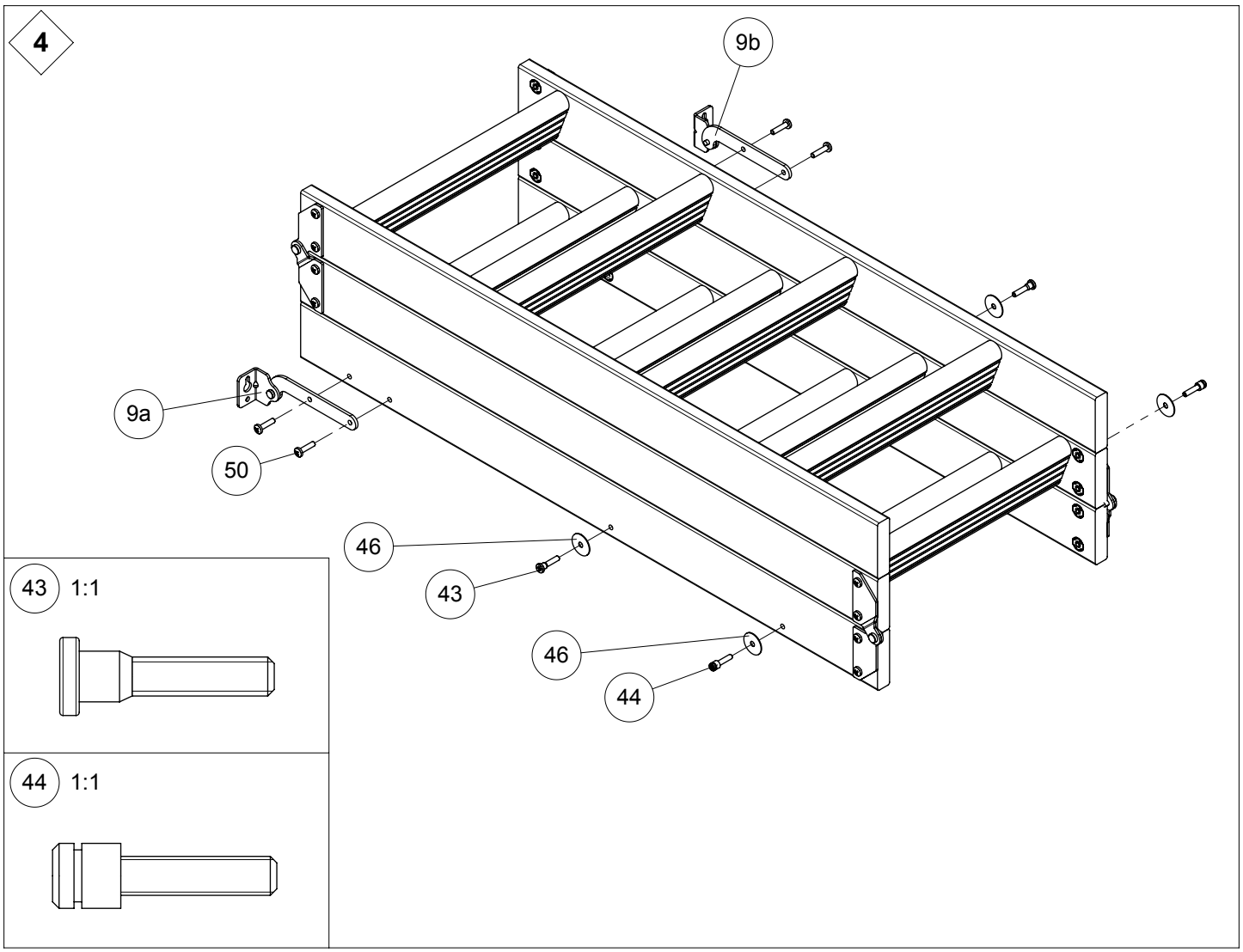
4
9b
9a
50
46
43
46
44
43 1:1
44 1:1

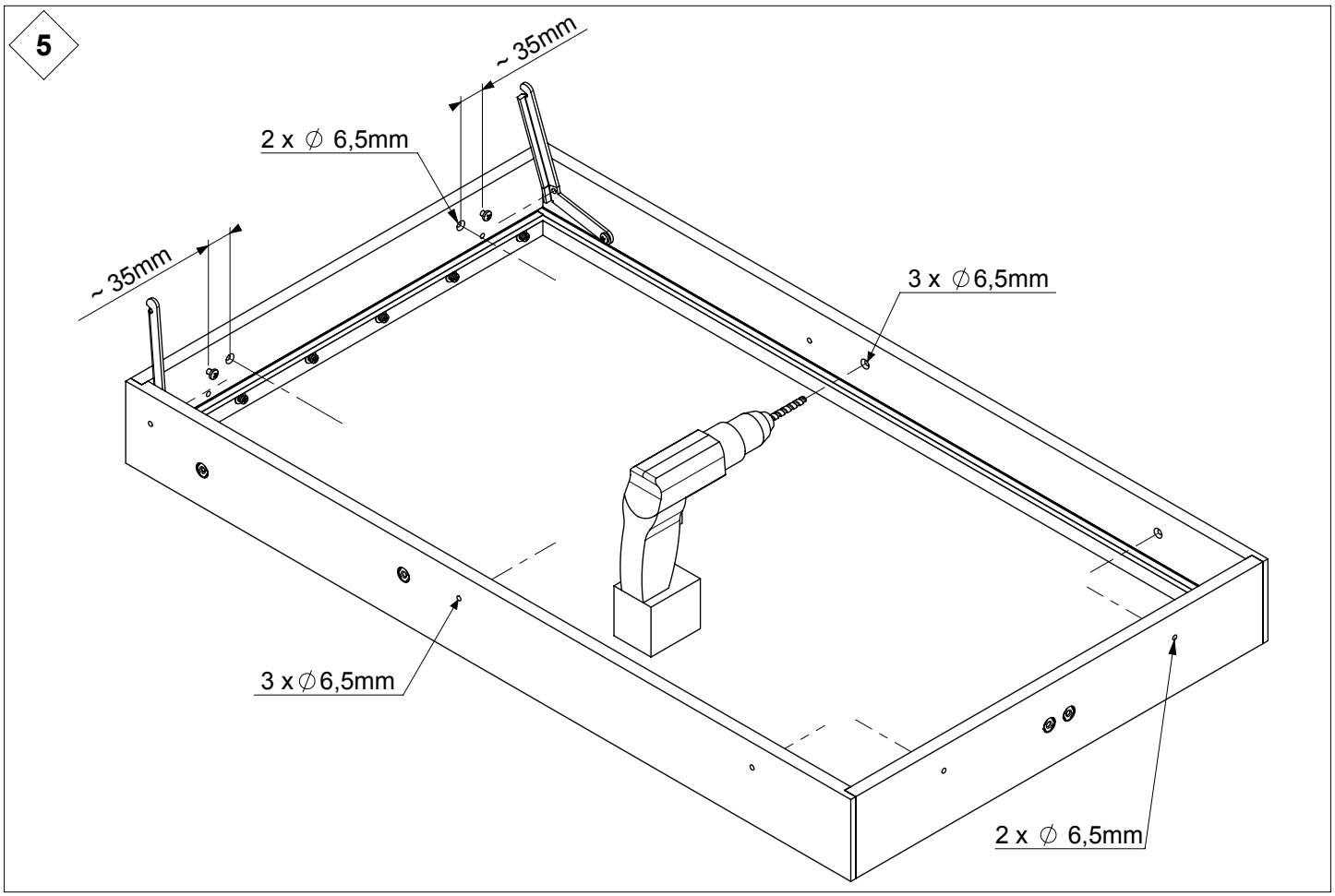
5
~ 35mm
2 x ∅ 6,5mm
~ 35mm
3 x ∅6,5mm
3 x ∅6,5mm
2 x ∅ 6,5mm

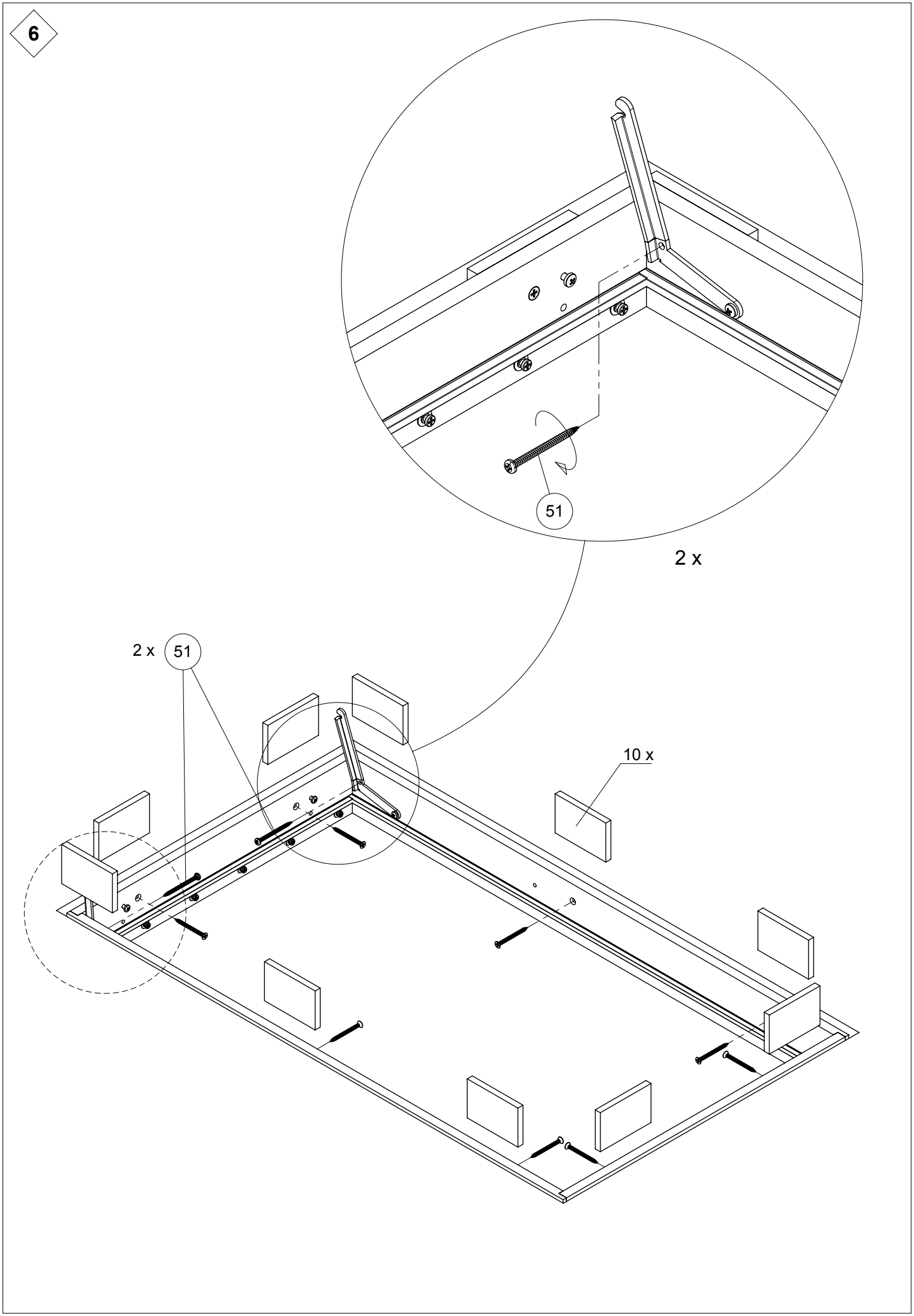
6
51
2 x
2 x
51
10 x

7

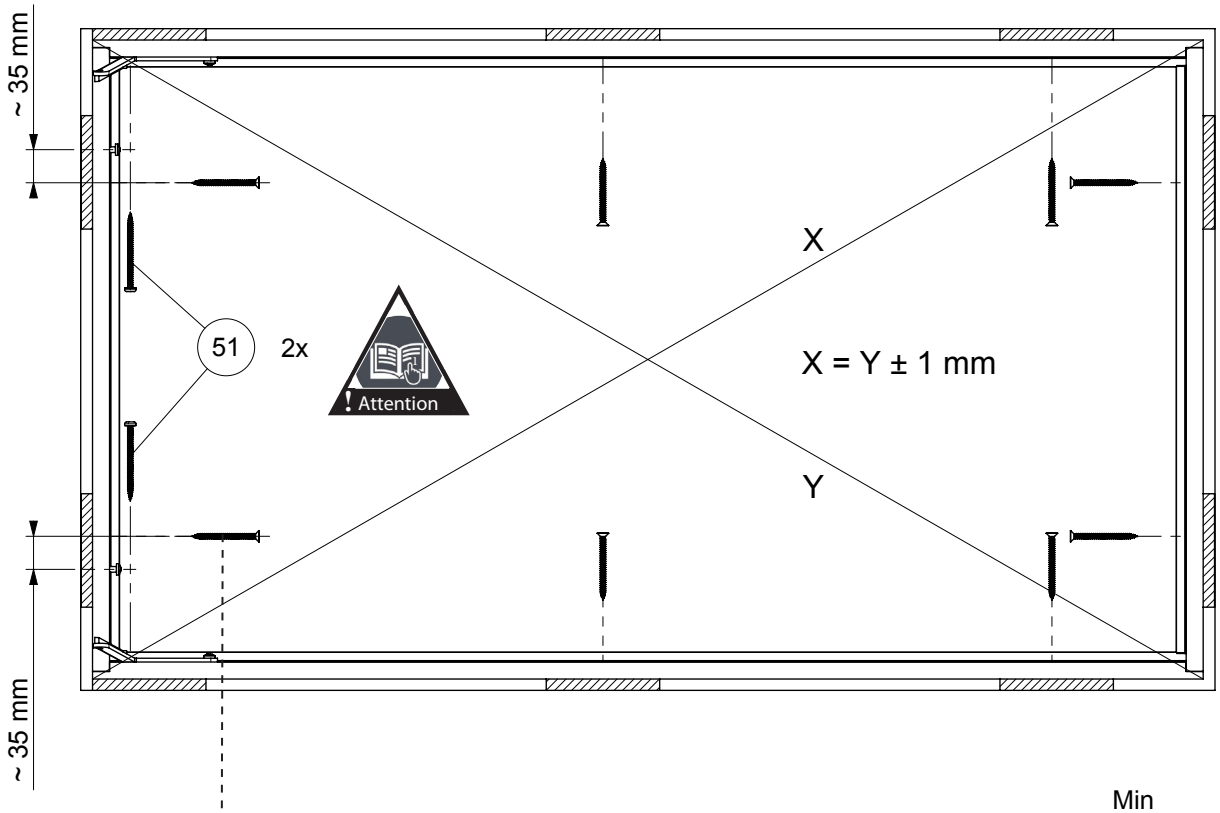
~ 35 mm
X
51
2x
Attention
X = Y ± 1 mm
Y
~ 35 mm

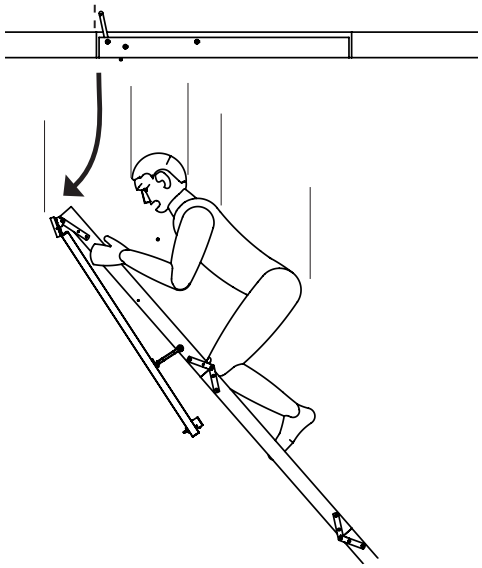

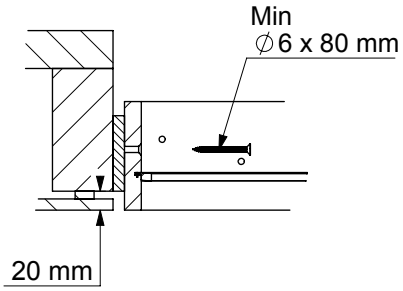
Min
∅6 x 80 mm
20 mm

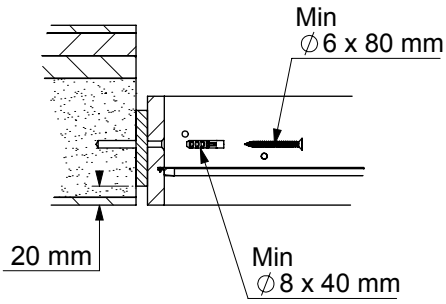
Min
∅6 x 80 mm
20 mm
Min
∅8 x 40 mm

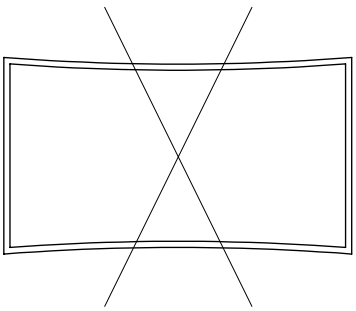

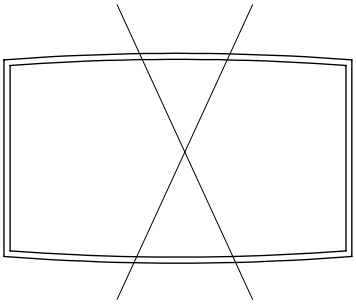

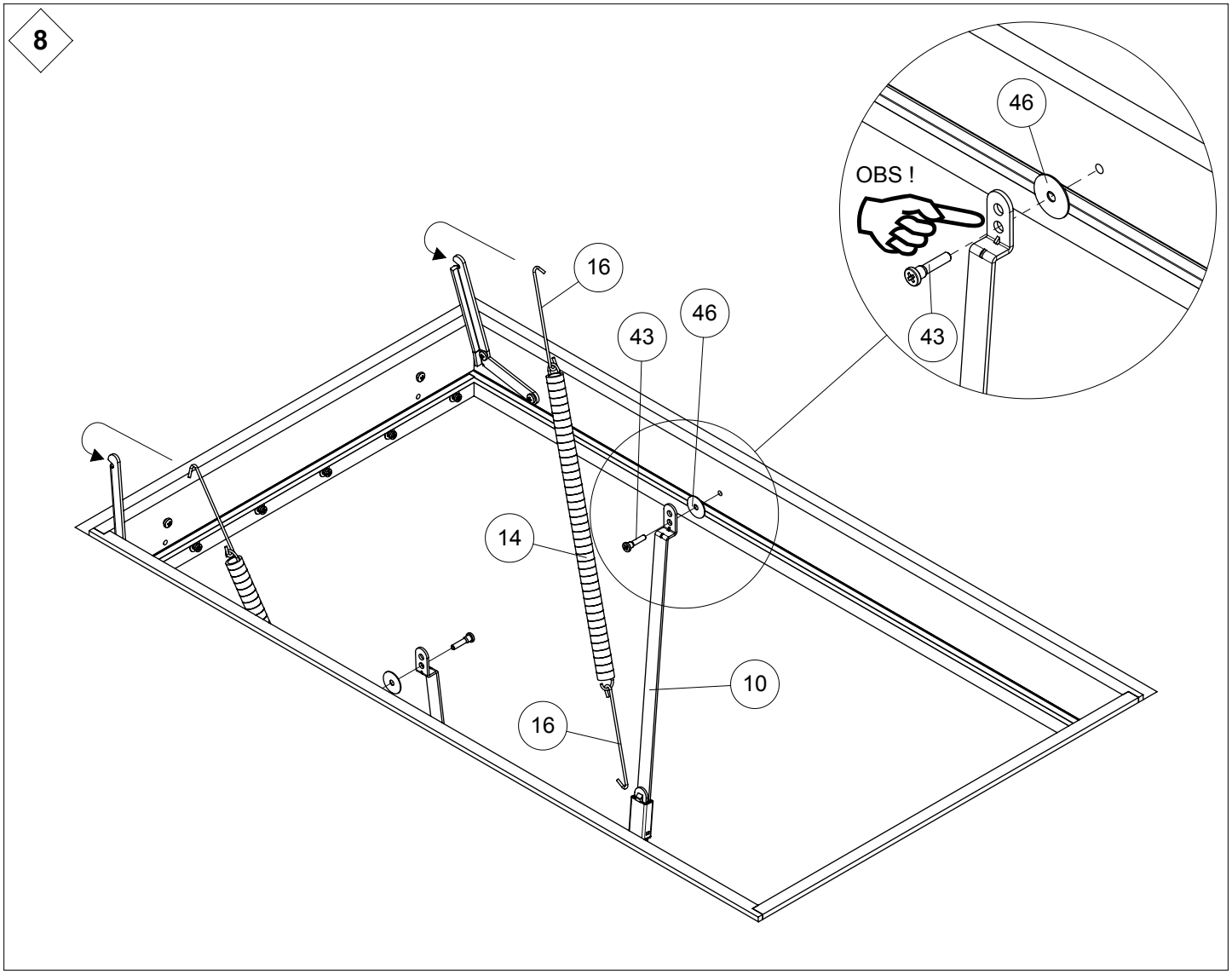
8
46
OBS !
43
16
46
43
14
10
16

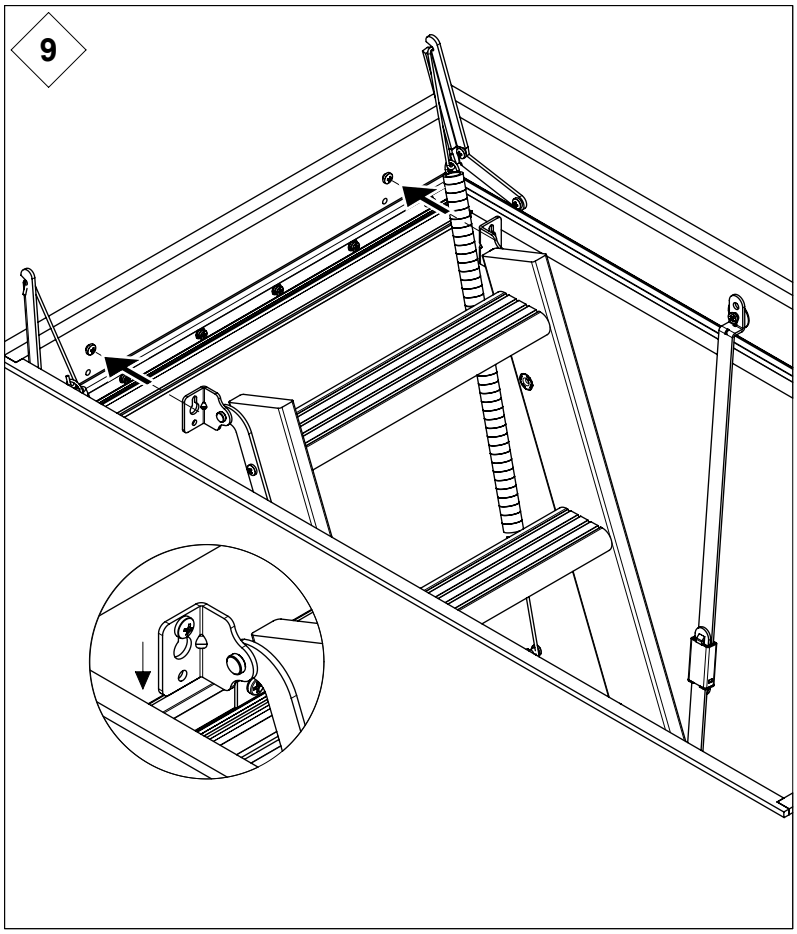
9

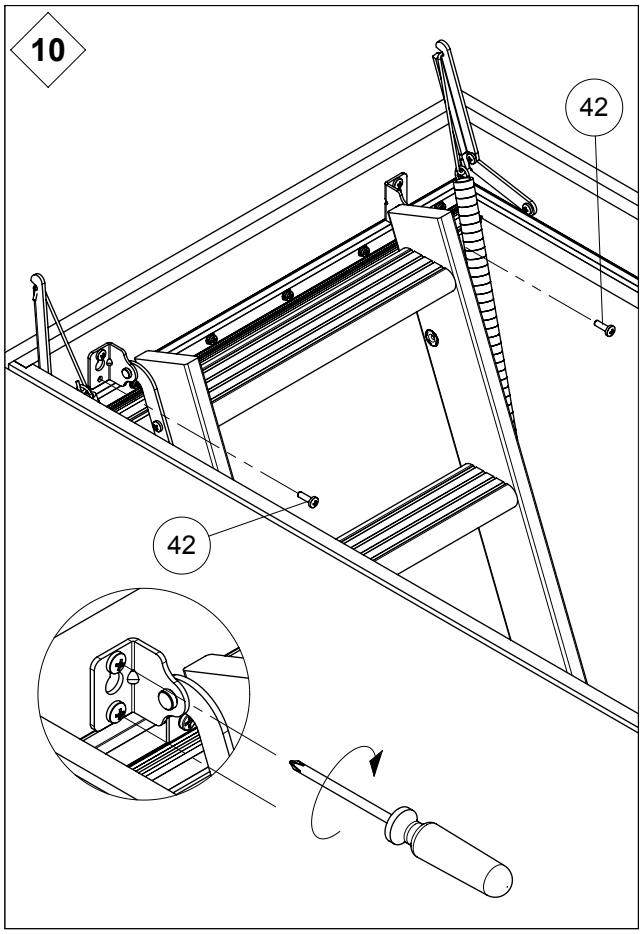
10
42
42

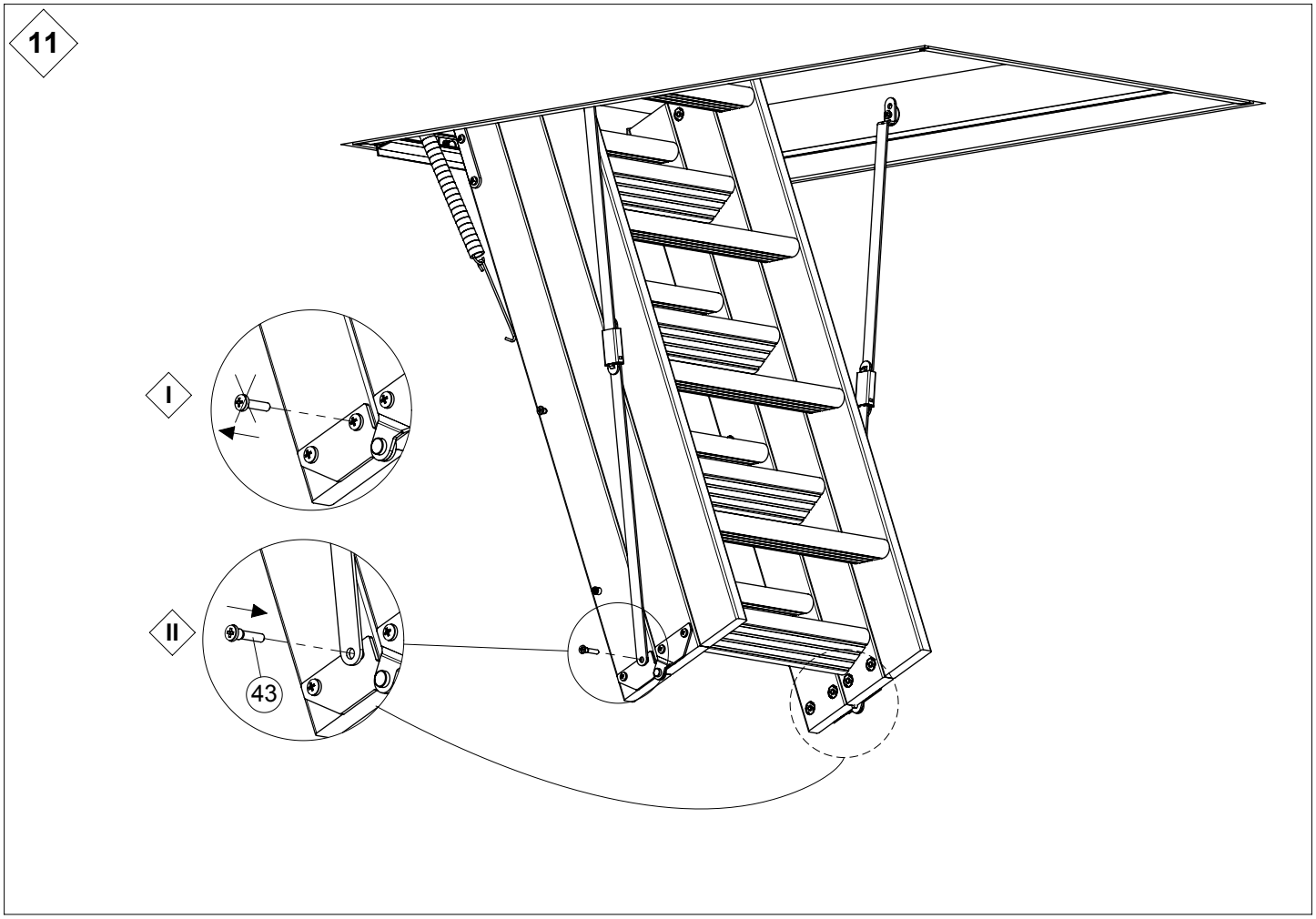
11
I
II
43

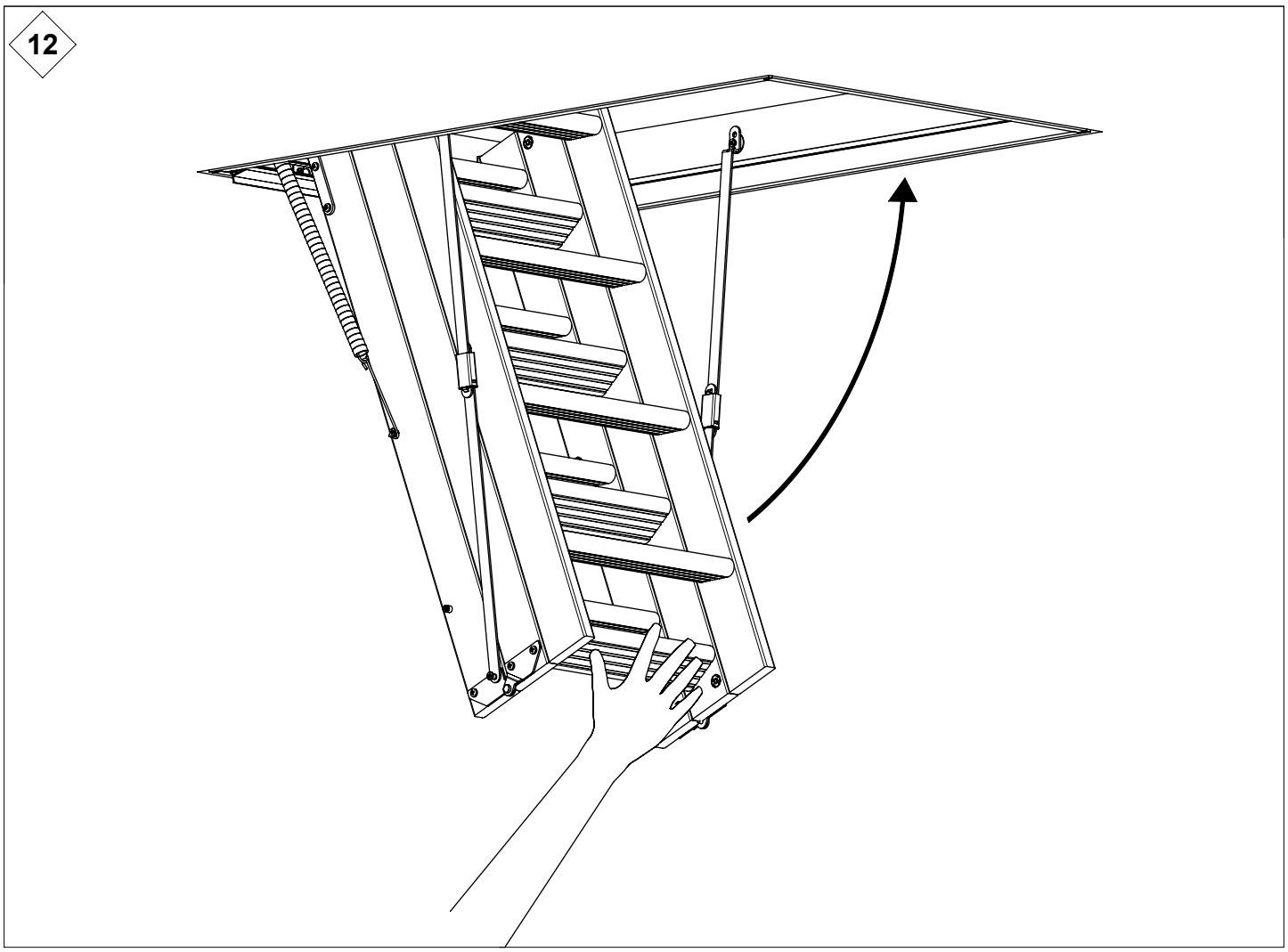
12

13

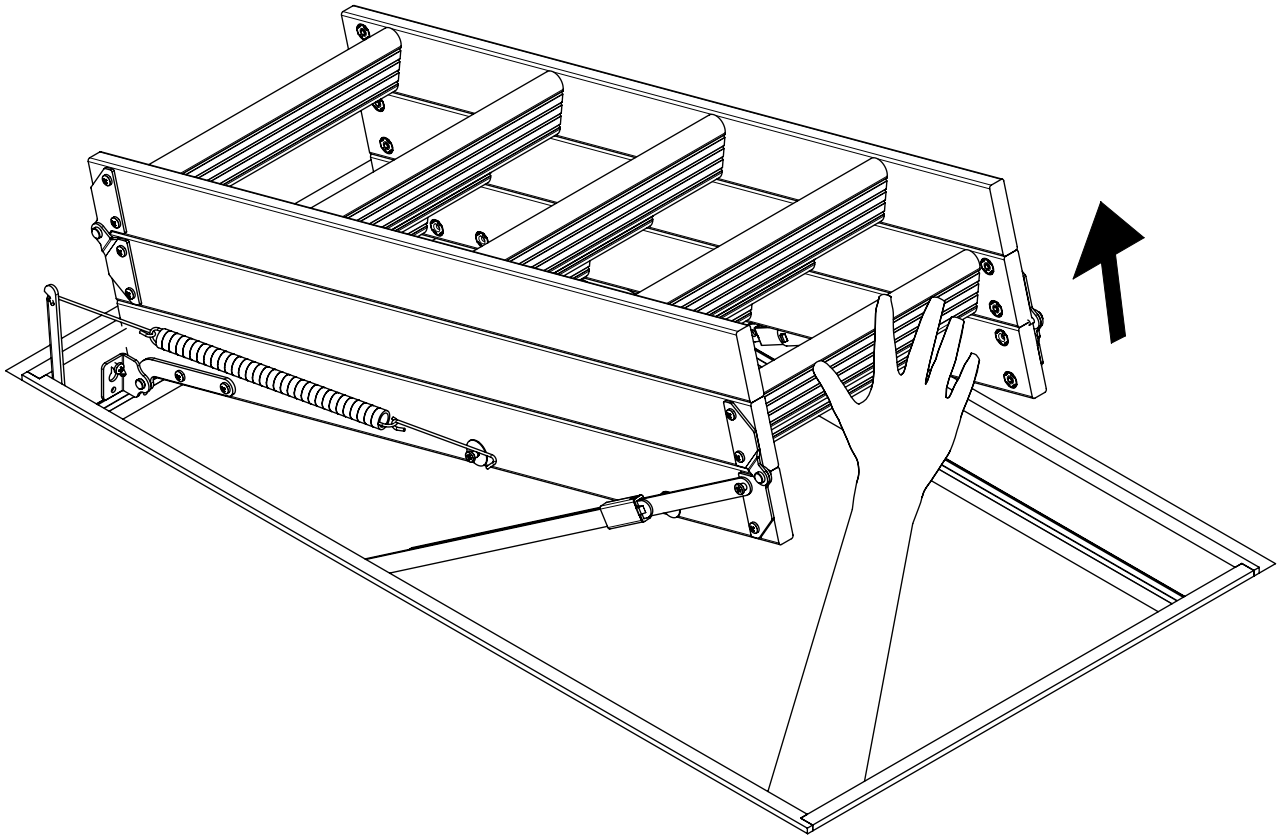

14

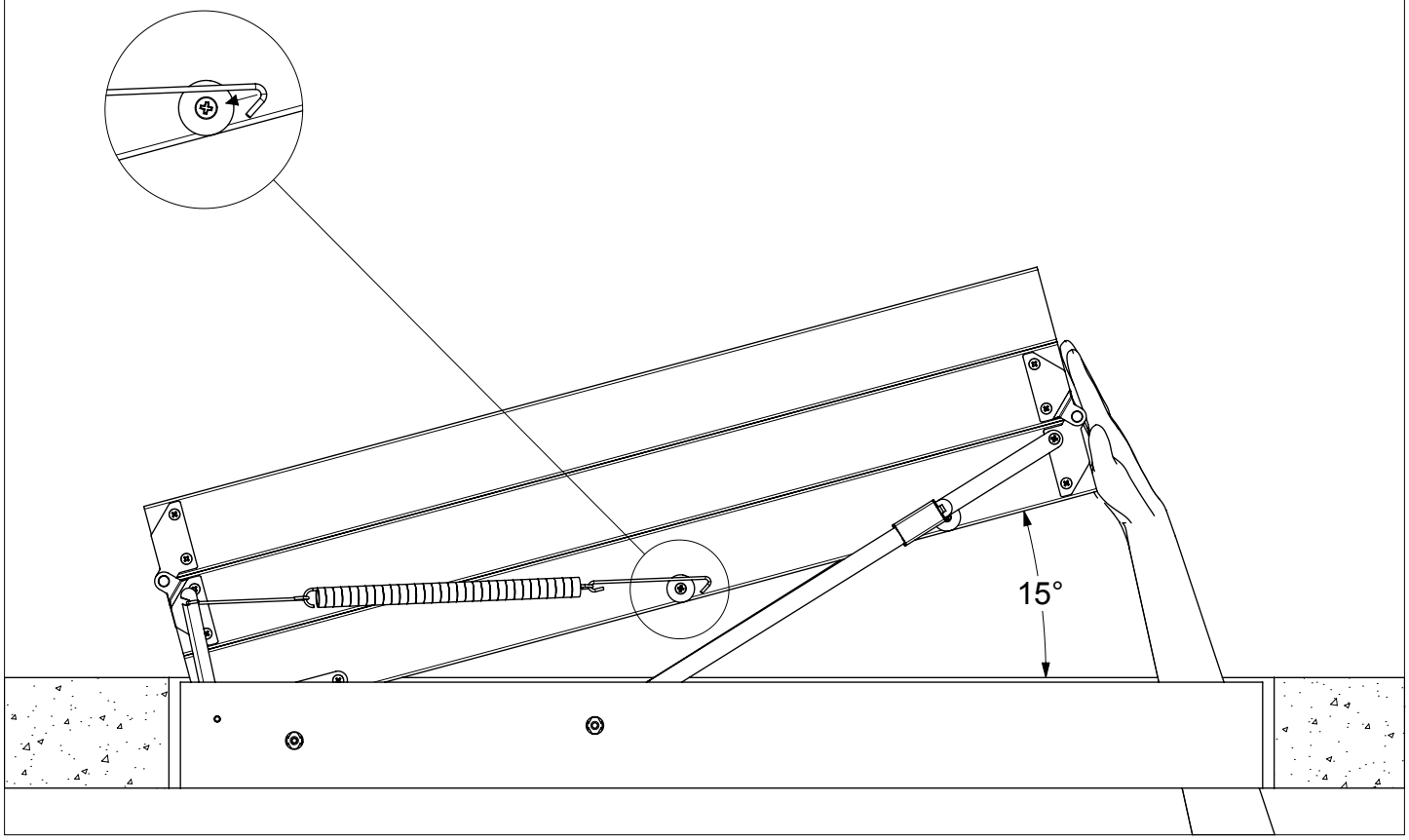

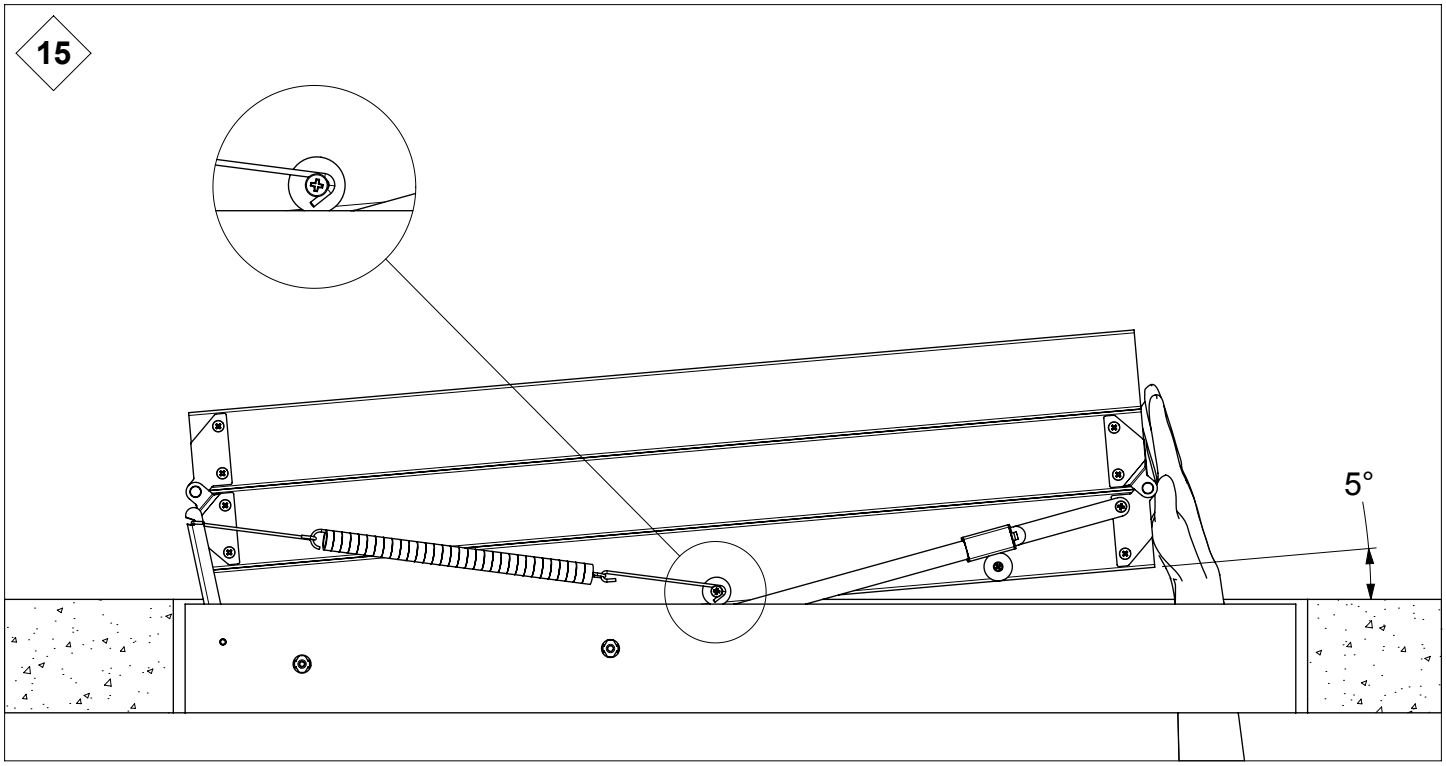
15
5°

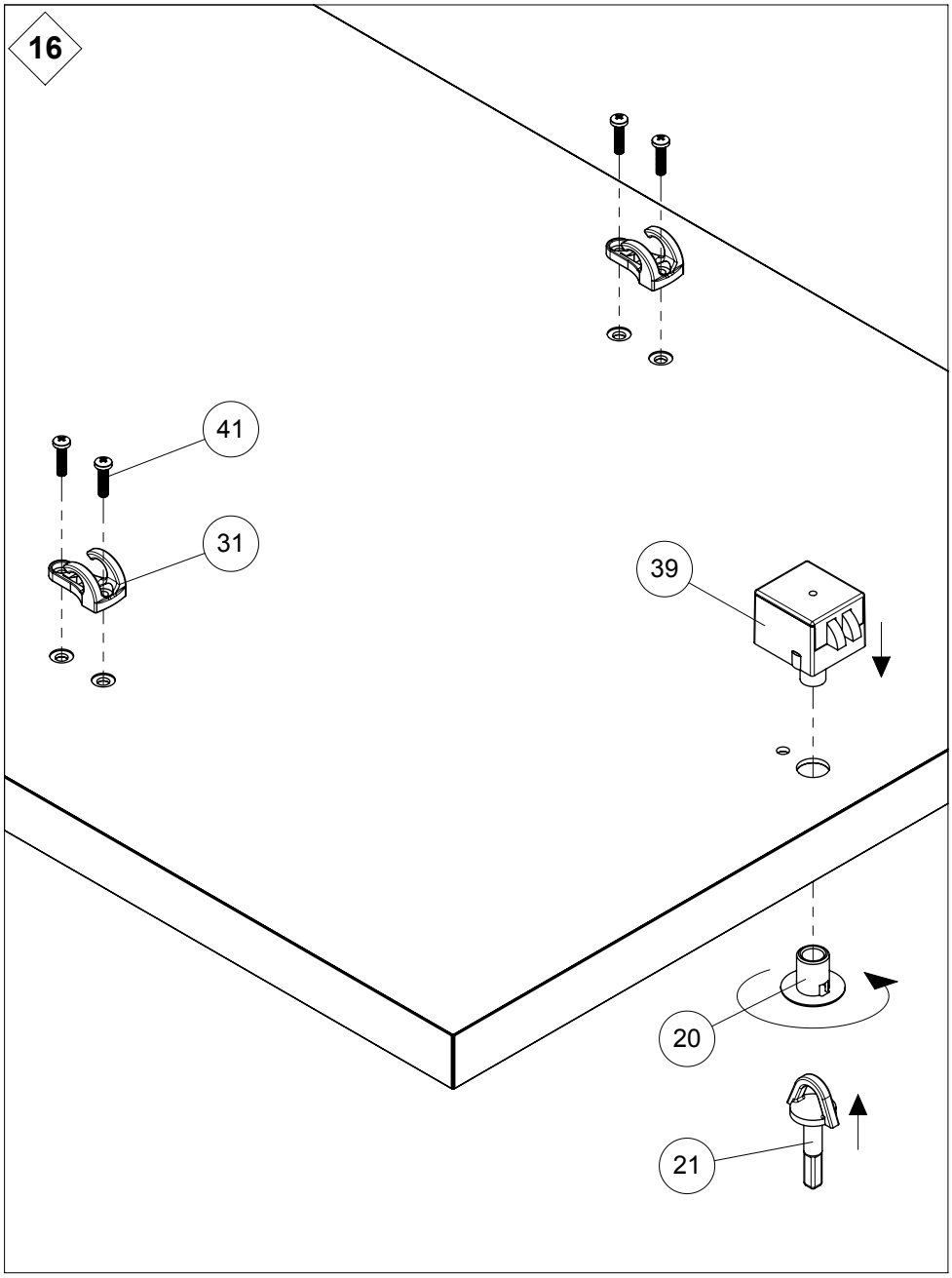
16
41
31
39
20
21

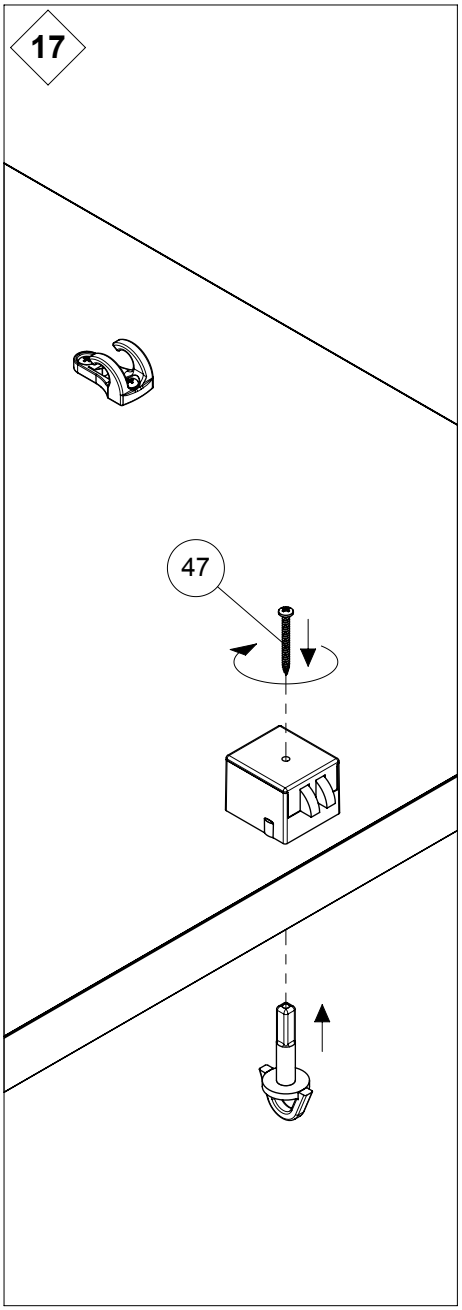
17
47

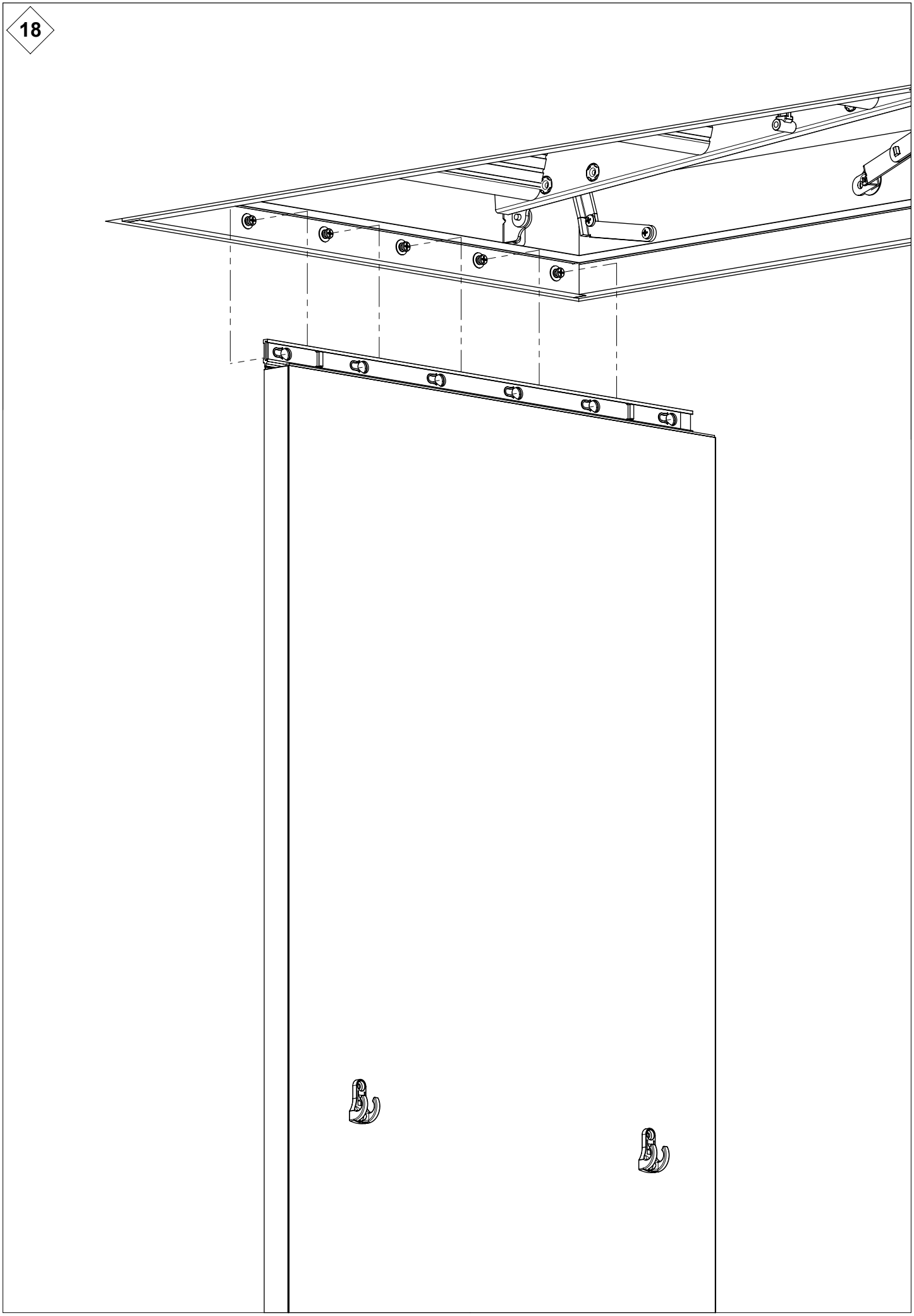
18

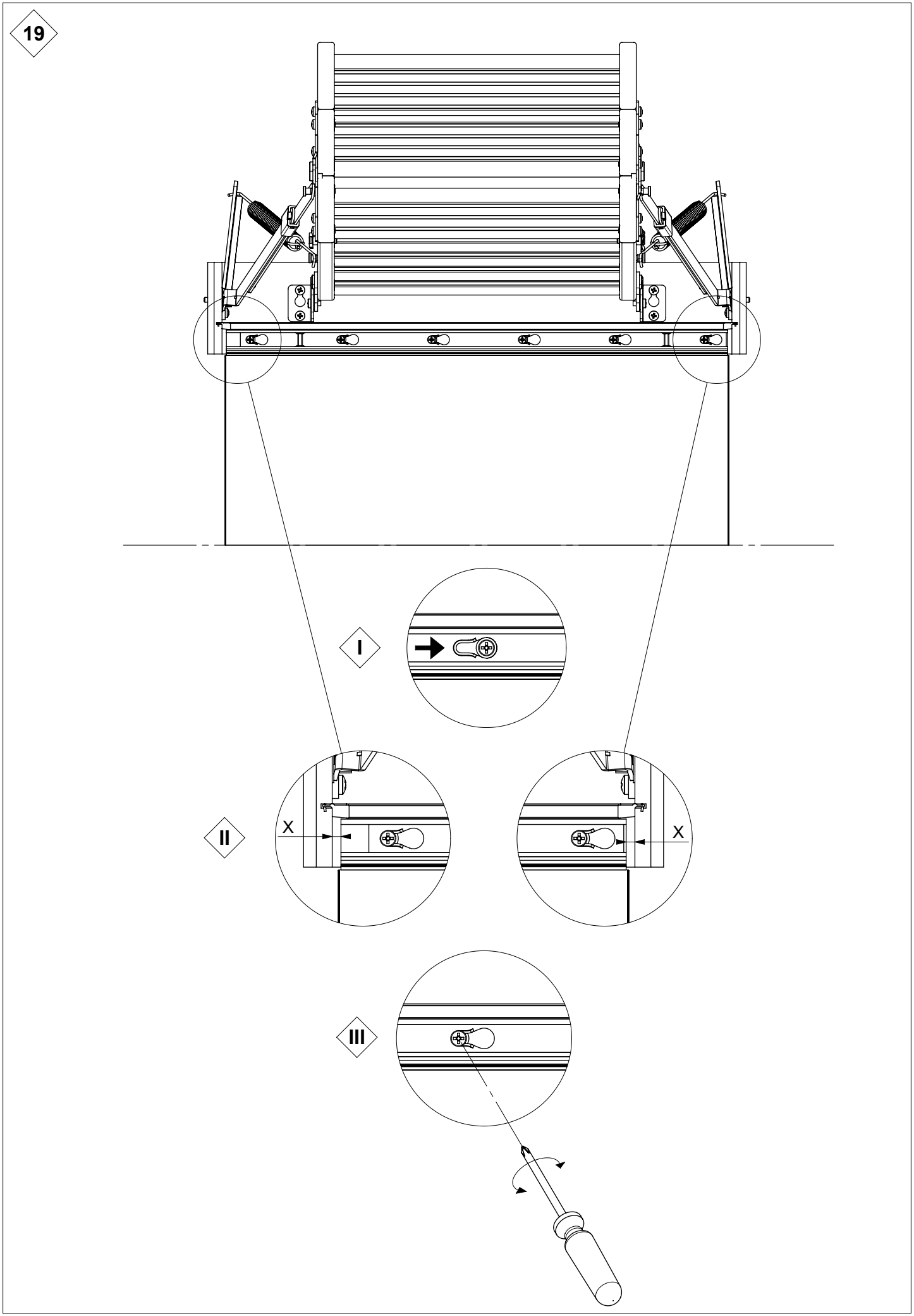
19
I
II
X
X
III

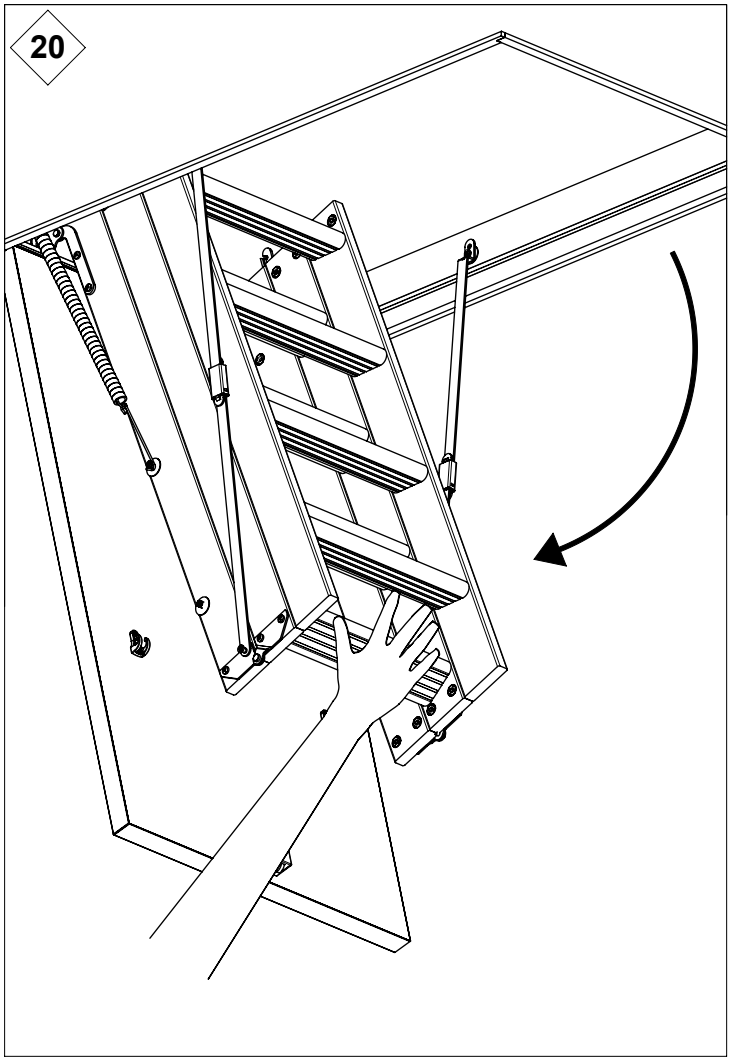
20

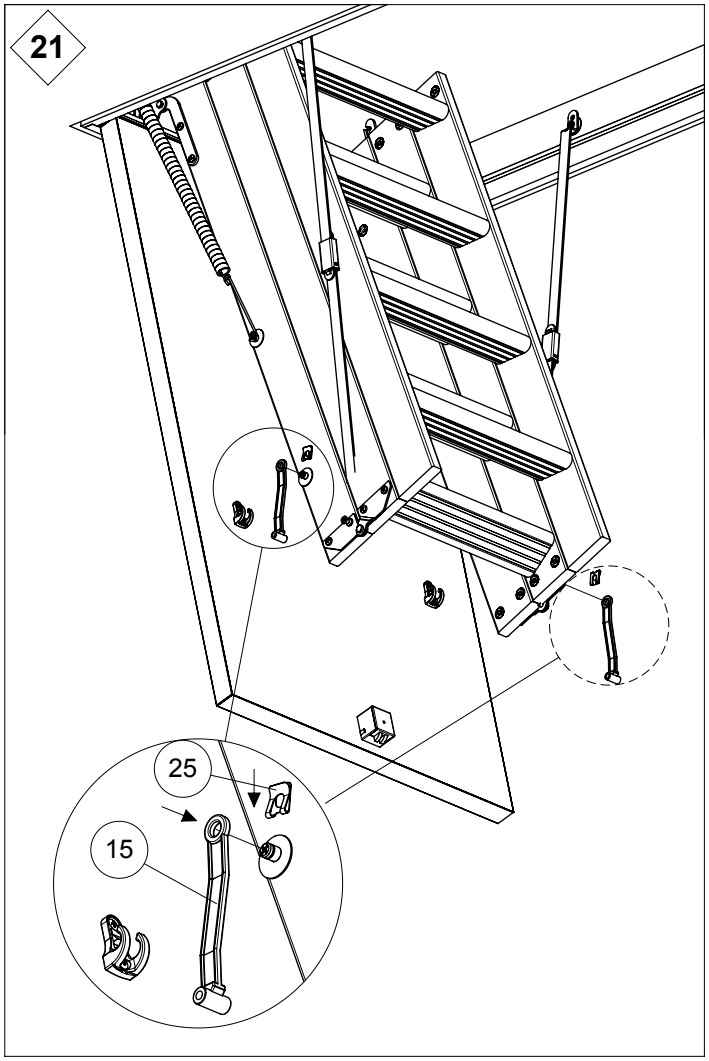
21
25
15

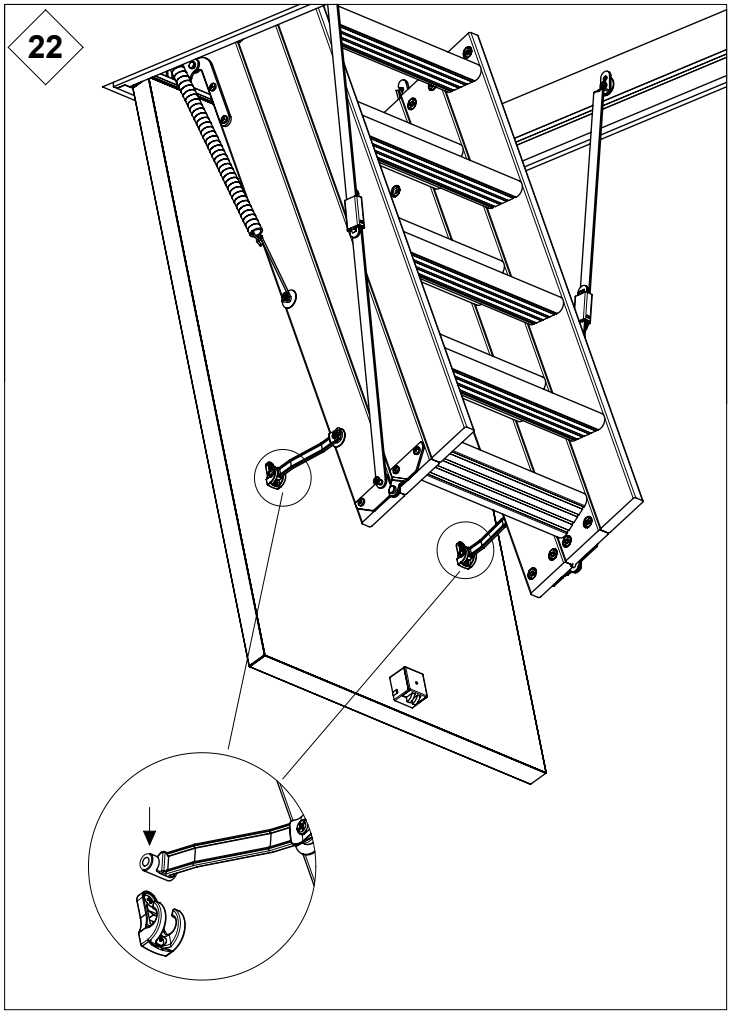
22

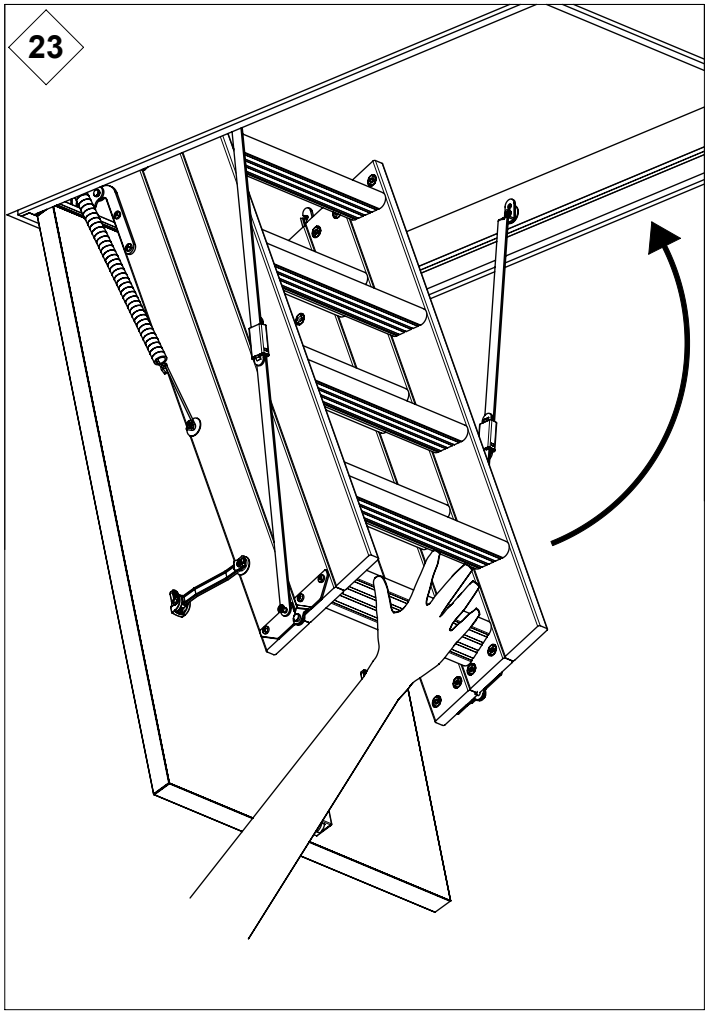
23

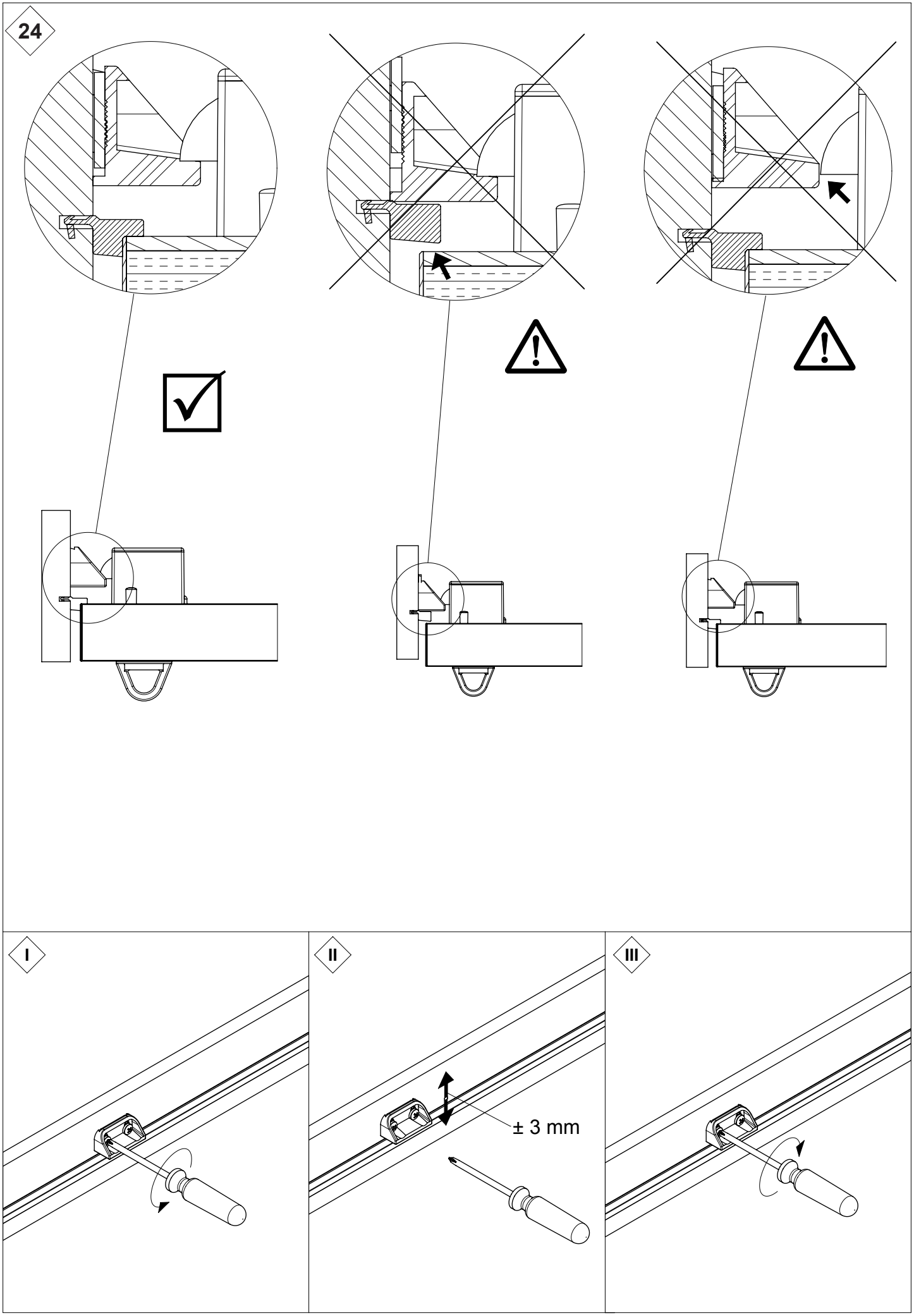
24
I
II
III
± 3 mm

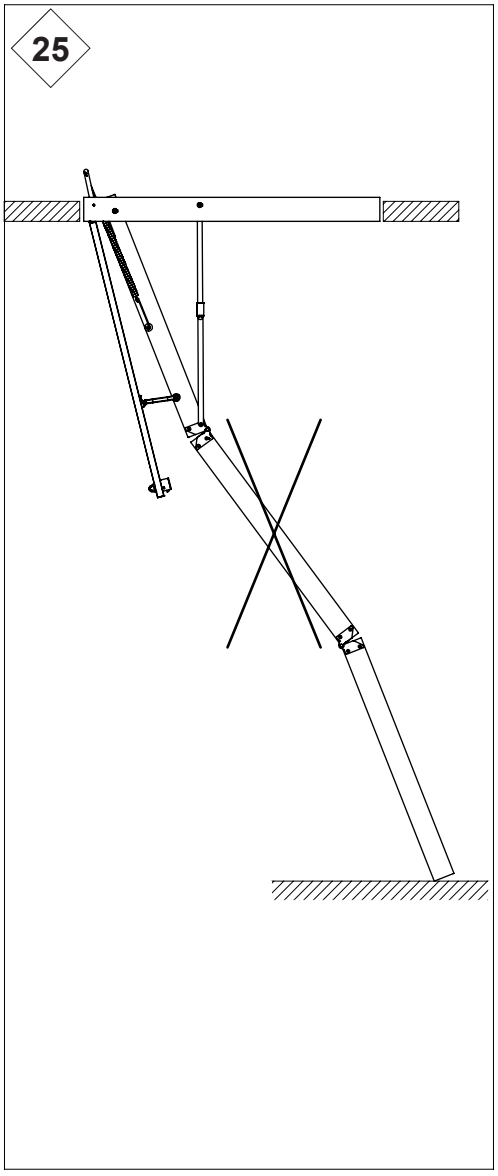
25

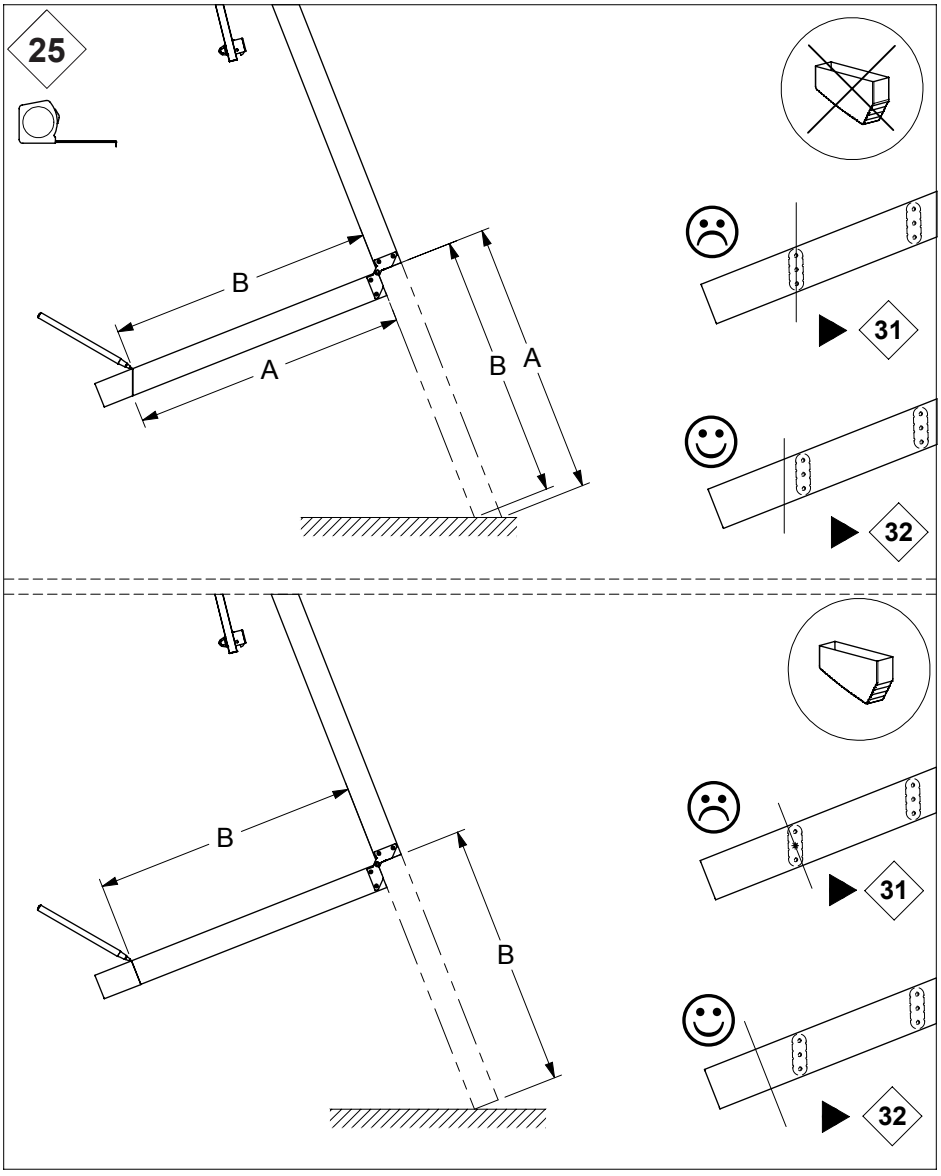
25
B
A
B
A
31
32
B
B
31
32

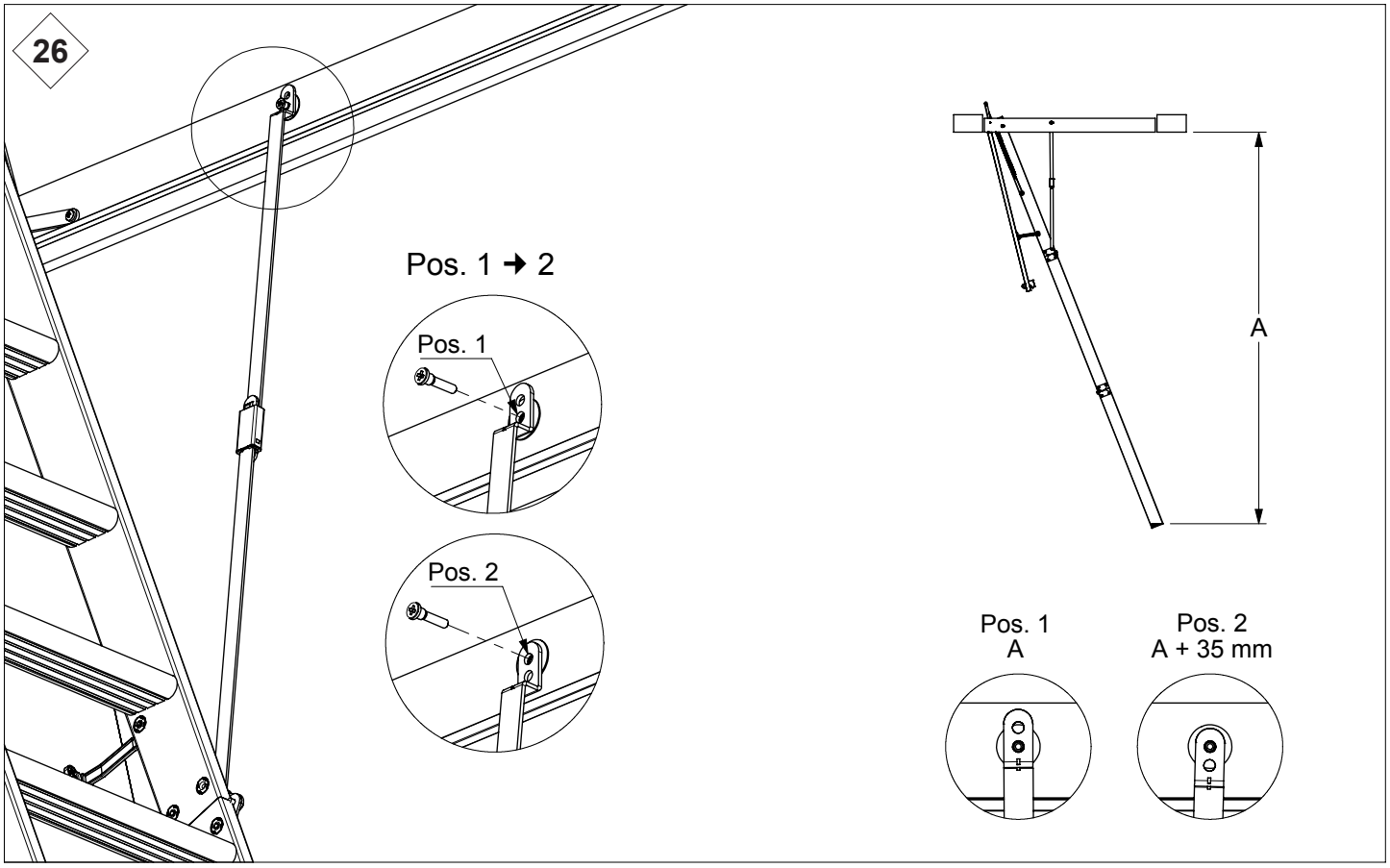
26
Pos. 1 ➜ 2
Pos. 1
Pos. 2
A
Pos. 1
A
Pos. 2
A + 35 mm

27

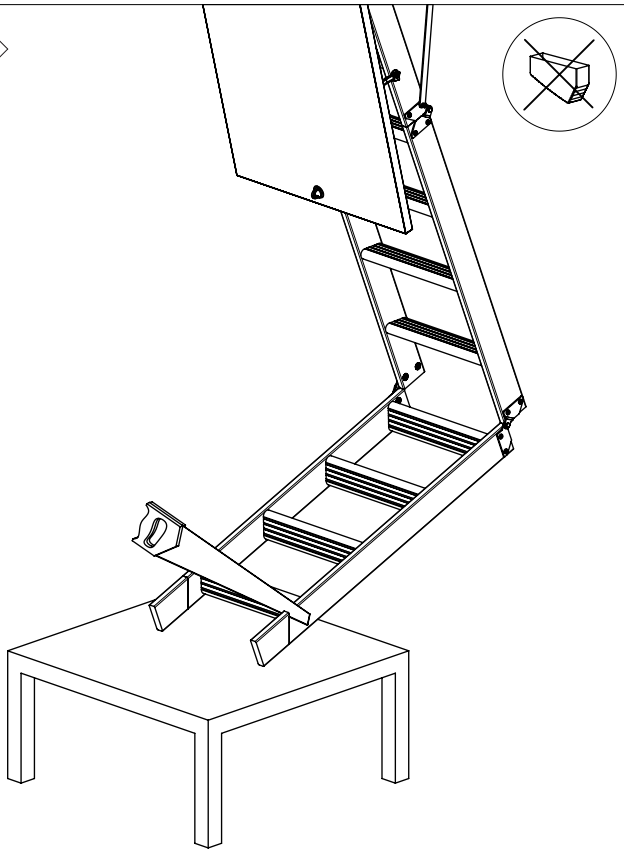

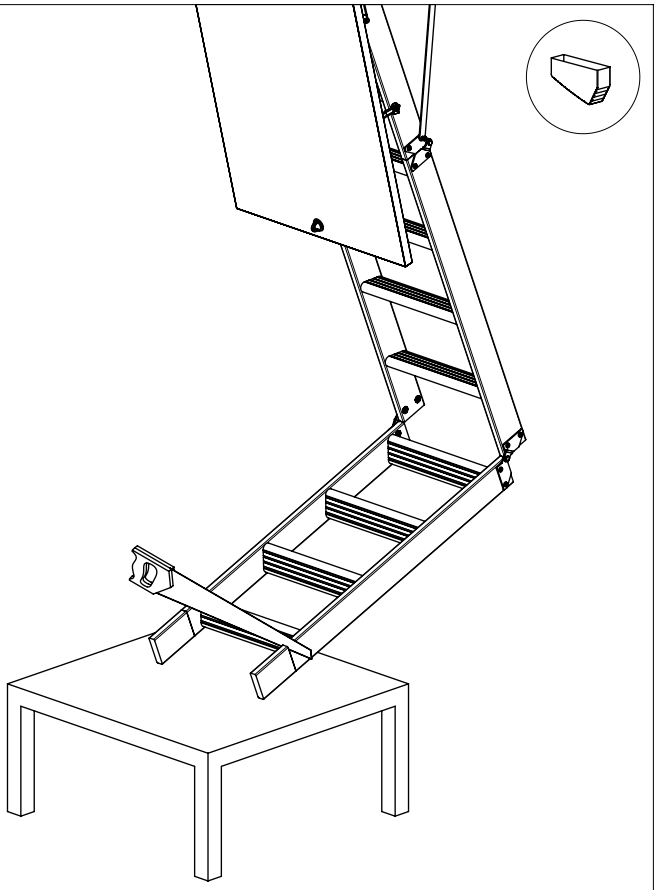
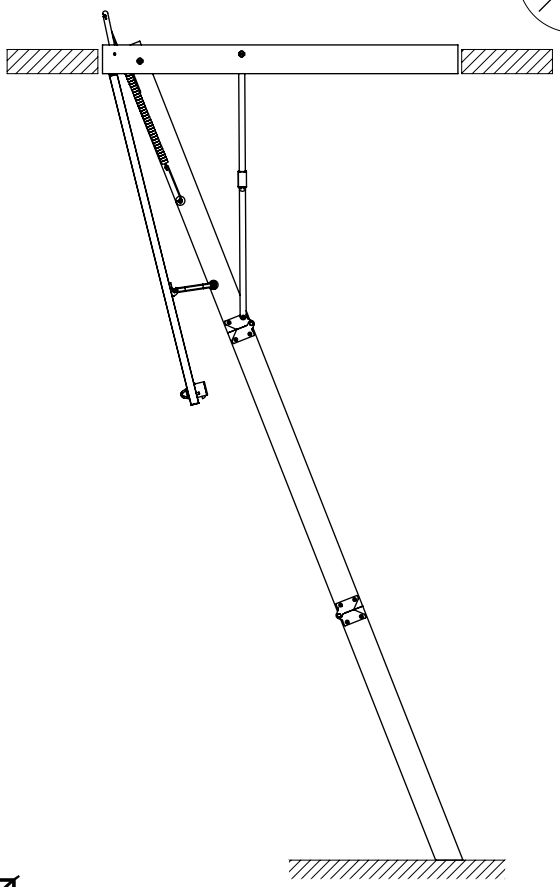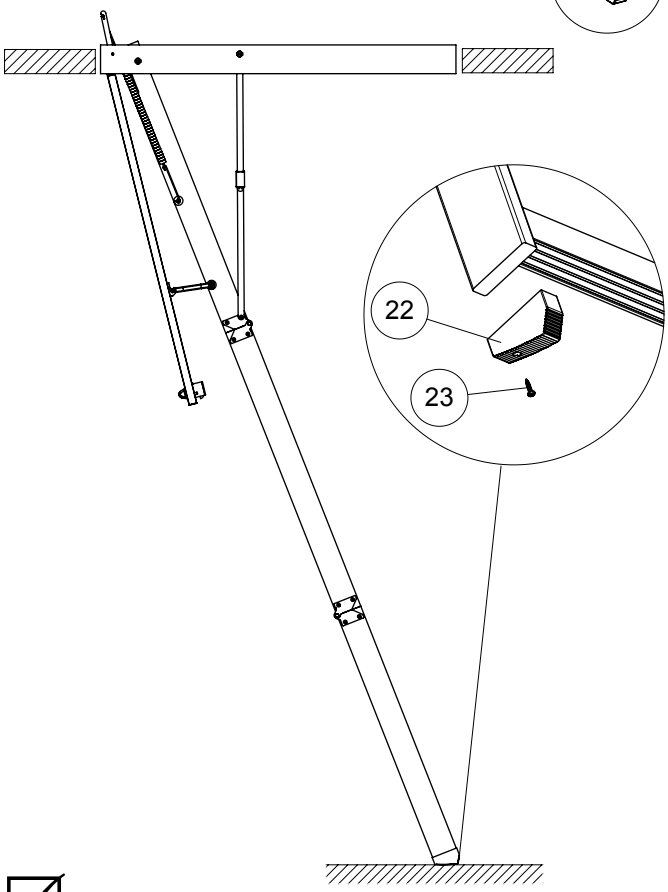
28